Operate Manual

V.2023.8

CATALOGUE

[Ⅰ] Terms of Use ----------01
[Ⅱ] Notes ----------02
[Ⅲ] Instrument Functions ----------03
[Ⅳ] Appearance and Structure----------04
[Ⅴ] Measurement Flow Chart----------06
[Ⅵ] Software Interface Introduction ----------08
6.1 Function Introduction----------08
6.2 Software Login----------11
6.3 Guide----------14
6.4 Calibrate----------21
6.5 Measure----------29
6.6 Setting----------31
6.7 Data View----------49
6.8 My Color----------54
6.9 Individual Center----------62
6.10 About----------63
6.11 Daily Record----------64
6.12 Update----------65
[Ⅶ] Measurement Interface Introduction-66
7.1 Color Diff ----------66
7.2 Data----------72
7.3 Figure----------73
7.4 Haze----------80
7.5 Opacity----------82
7.6 Metamerism----------83
7.7 Liquid Chromaticity----------84
7.8 Find Similar Color----------85
7.9 Color Master Batches----------87
7.10 Titanium Dioxide----------88
7.11 Paste----------89
[Ⅷ] Trouble Shooting----------90
[Ⅸ]Accessories----------91
[Ⅹ] Company Statement----------94

Term of Use

1.This instrument is designed to measure the reflectance value/figure, chromaticity value, color difference value,pass/fail result,color simulation,etc with the advantage of compact structure, light weight, high test accuracy. and simple operation.
2.This instrument is widely used in factories, labs and on spot. It can achieve great color measurement result in the quality control of almost all fields.
3.Instrument warranty time starts from the purchase date. If you need any service, please contact local agent to contact us.
4.To avoid damage to instrument accuracy or precision, please do not disassemble the instrument. Damage to the instrument caused bydisassembly or improper use is NOT included in the warranty.

Notes

1.This instrument is a precision instrument and cannot withstand collisions caused by falling. Please place it in a flat place.
2.This instrument is not moisture proof,Please store the instrument in dry environment.
3.Instrument screen is made by glass which can be damaged by external force or sharp materials.
4.We recommend to use original power adaptor.
5.To ensure the machine to work properly, please do not store, or use it in places that are too hot or too cold; please do not put the
machine in damp environment, or directly under sunlight. Do not use it in severe environment such as strong shock or quake.
6.Please avoid strong electromagnetic interference in usage.
7.Please keep the instrument steady; do not shake the instrument in usage.
8.Please power off the instrument after usage and keep it into power off status if do not use it.

9.Please store the instrument in a dry area.
10.Users are forbidden to clean the inner sphere by themselves.
11.Any problem, please contact with us, we will solve for you asap. Please do not repair it by yourself.
12.If this user manual is further updated, we are not obliged to notify. Any questions, please contact us directly

Instrument Functions

1.Conform to CIE No.15, GB/T 3978, GB 2893,GB/T 18833,ISO7724/1,DIN 5033 Teil7,-JIS Z8722 Condition C, ASTM E1164.
2.Can test both reflectance for opaque materials and transmittance for clear and transparent materials.
3.Simultaneous measurement of SCI (specular component included) and SCE (specular component excluded)
4.It adopts pulse xenon lamp and provides wider wavelength range.
5.Open measurement area which makes it unlimited on sample sizes.

6.Adopt 7.0 inches touch screen, friendly operation interface.

7.U disk to transfer data and data can be viewed from PC.

8.Different parameters to choose to meet customers' different requirement.

9.Instrument comes with professional PC software to generate and manage test report.

Appearance and Structure

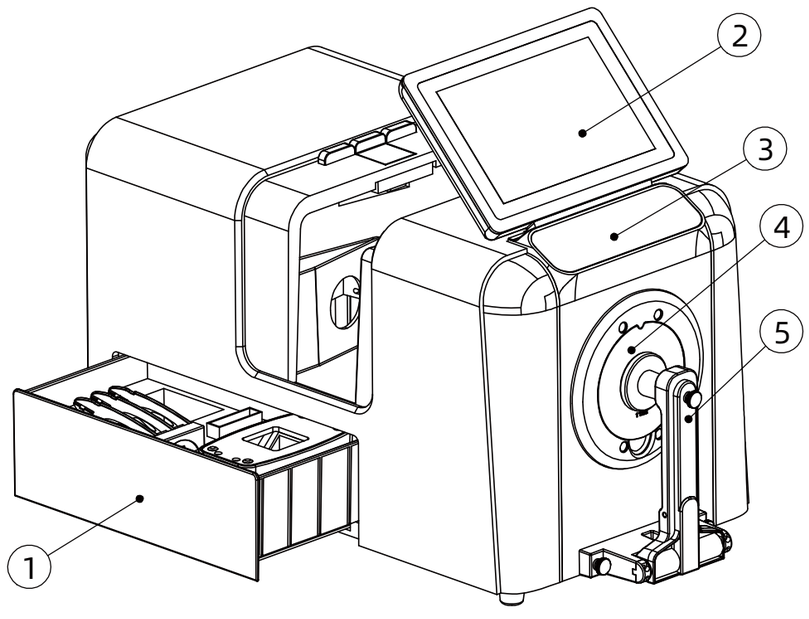

① Attached storage drawer ② Display screen

③ Mode display board ④ Aperture plate ⑤ Clamp plate

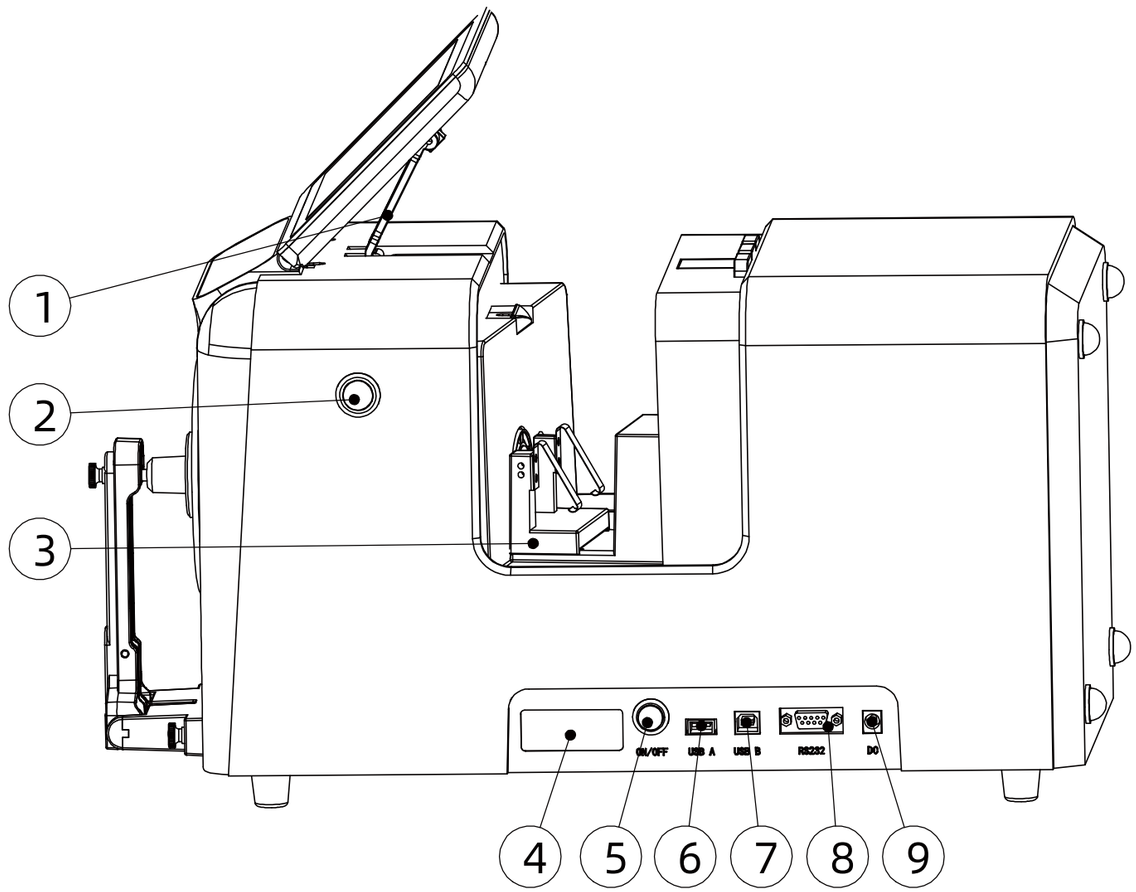

① Screen shake holder ② Test key ③ Projection test fixture ④ Dogtag

⑤ Power switch ⑥ USB ⑦ USB-B ⑧ Serial port ⑨ DC power socket

Measurement Flow Chart

First time to start the instrument

Connect with power supply and switch on

Open the software and login

Enter into guide interface and set the instrument accordingly.

Second or more time to start the instrument

Connect with power supply and switch on

Open the software and login

Click calibrate to enter into calibration interface

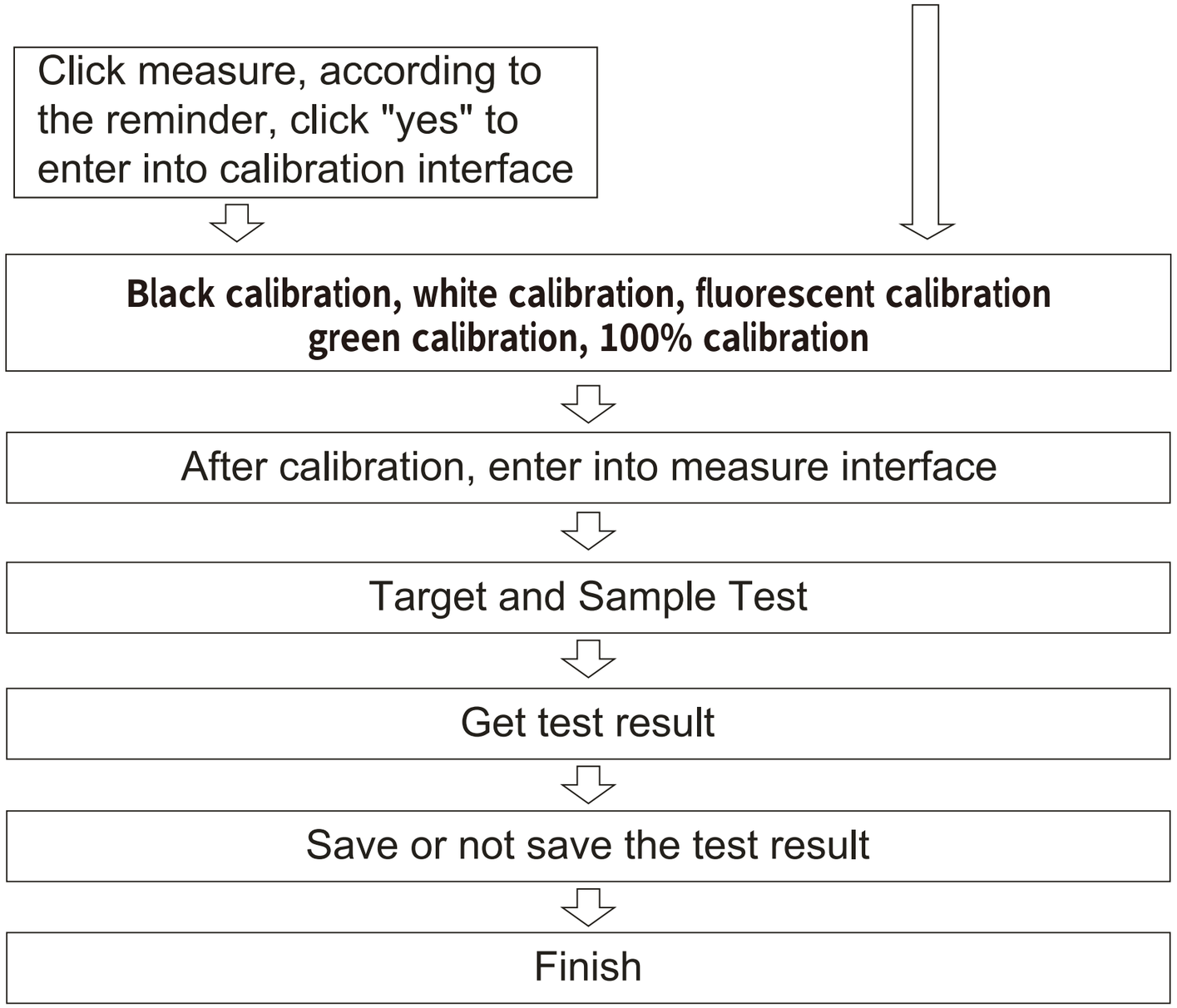
Click measure, according to the reminder, click "yes" to enter into calibration interface
Black calibration, white calibration, fluorescent calibration green calibration, 100% calibration
After calibration, enter into measure interface
Target and Sample Test
Get test result
Save or not save the test result
Finish

Software Interface Introduction

[Function Introduction]

A–1

Main Interface

The software consists of 9 modules measure,setting,data view,my color,individual center,about,daily record and update,calibrate.

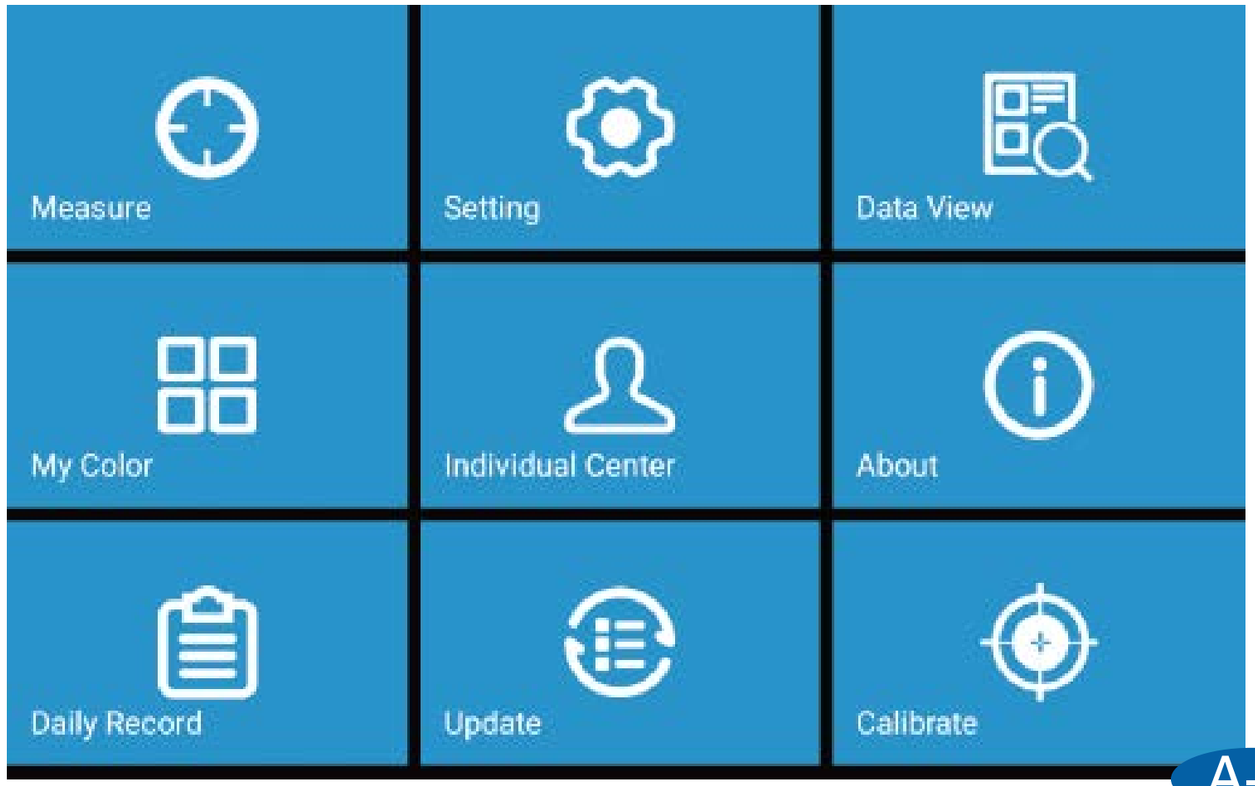

A–1

A–2

Title Bar

Title bar from left to right are home icon,current page remind,illuminate/angle, SCI/SCE mode, reflectance/transmittance mode,UV condition,aperture,instrument temperature and instrument humidity.

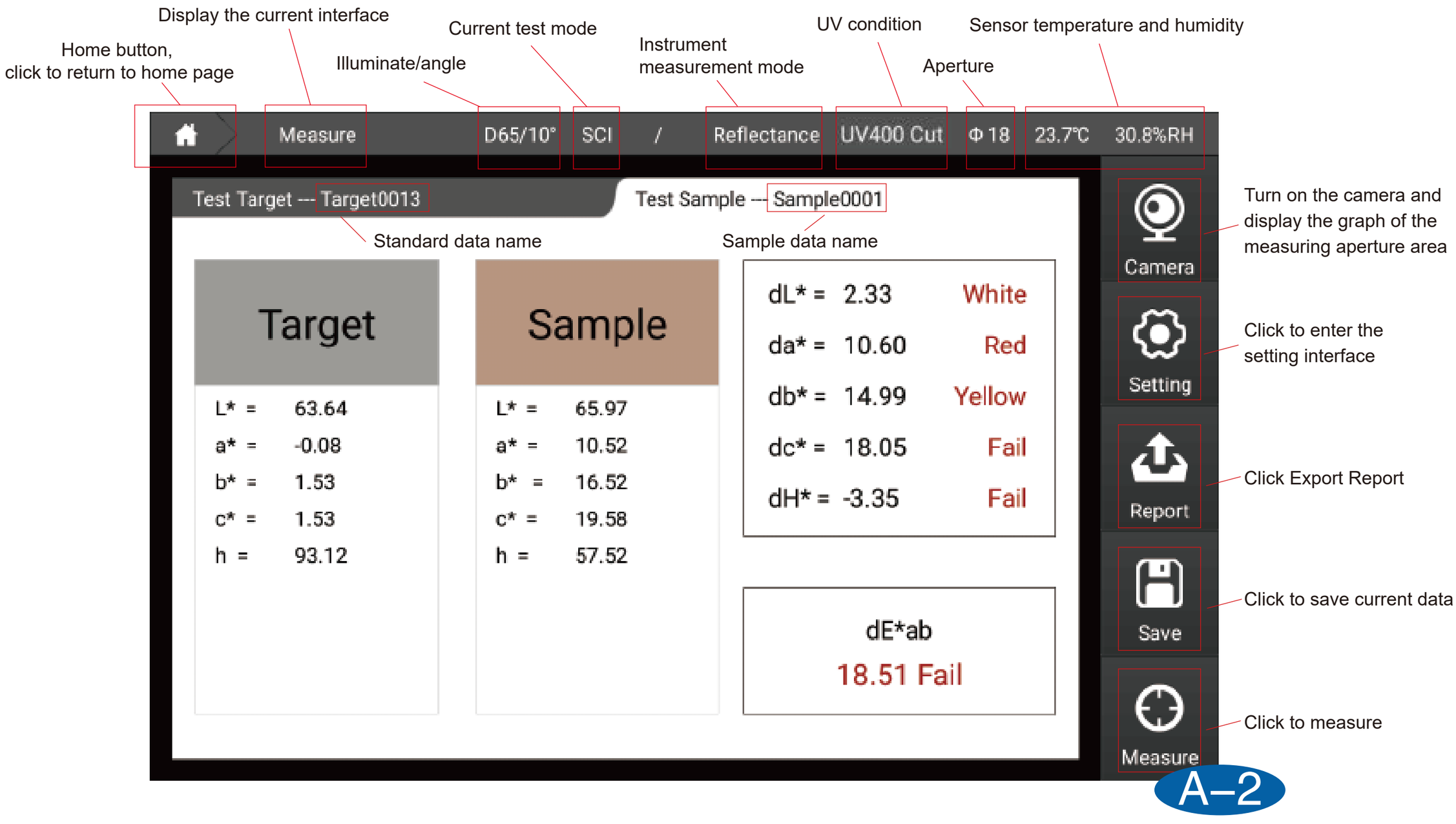
Home button,
click to return to home page
Display the current interface
Illuminate/angle
Current test mode
Instrument
measurement mode
UV condition
Aperture
Sensor temperature and humidity
Measure
D65/10°
SCI
/
Reflectance
UV400 Cut
Φ 18
23.7℃
30.8%RH
Test Target --- Target0013
Test Sample --- Sample0001
Standard data name
Sample data name
Target
L* = 63.64
a* = -0.08
b* = 1.53
c* = 1.53
h = 93.12
Sample
L* = 65.97
a* = 10.52
b* = 16.52
c* = 19.58
h = 57.52
dL* = 2.33 White
da* = 10.60 Red
db* = 14.99 Yellow
dc* = 18.05 Fail
dH* = -3.35 Fail
dE*ab
18.51 Fail
Camera
Setting
Report
Save
Measure
Turn on the camera and display the graph of the measuring aperture area
Click to enter the setting interface
Click Export Report
Click to save current data
Click to measure
A–2

[Software Login]

Login is divided into local login and network login. Enter the account number and password, the instrument will automatically identify the account type.Tick the remember password and it can realize automatically entered the next time.When you turn on the instrument next time, you will enter the software directly.

B–1

Local Login

Login in account is admin, pass word is the instrument serial number (after login, pass word can be revised in the individual center). If the instrument serial number is C81118C0128, the pass word will also be C81118C0128.

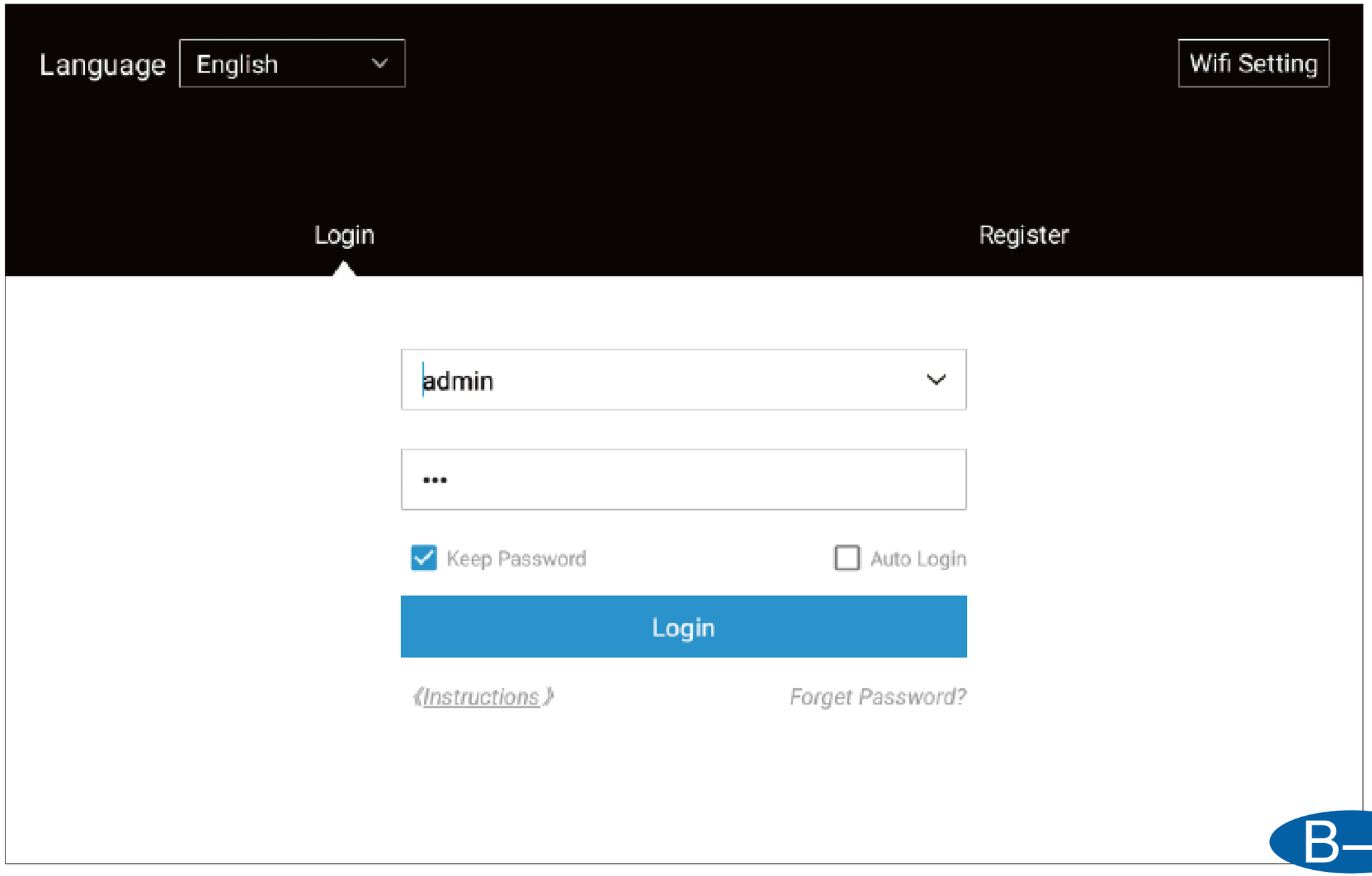
Language
English
Wifi Setting
Login
Register
admin
Keep Password
Auto Login
Login
《Instructions》
Forget Password?

B–1

B–2

Net Work Login

Network login needs to connect to the network, click register, after registration is completed, user can use the registered account to perform login. Use the network login to upload the stored data to the cloud, and manage the data on the windows.

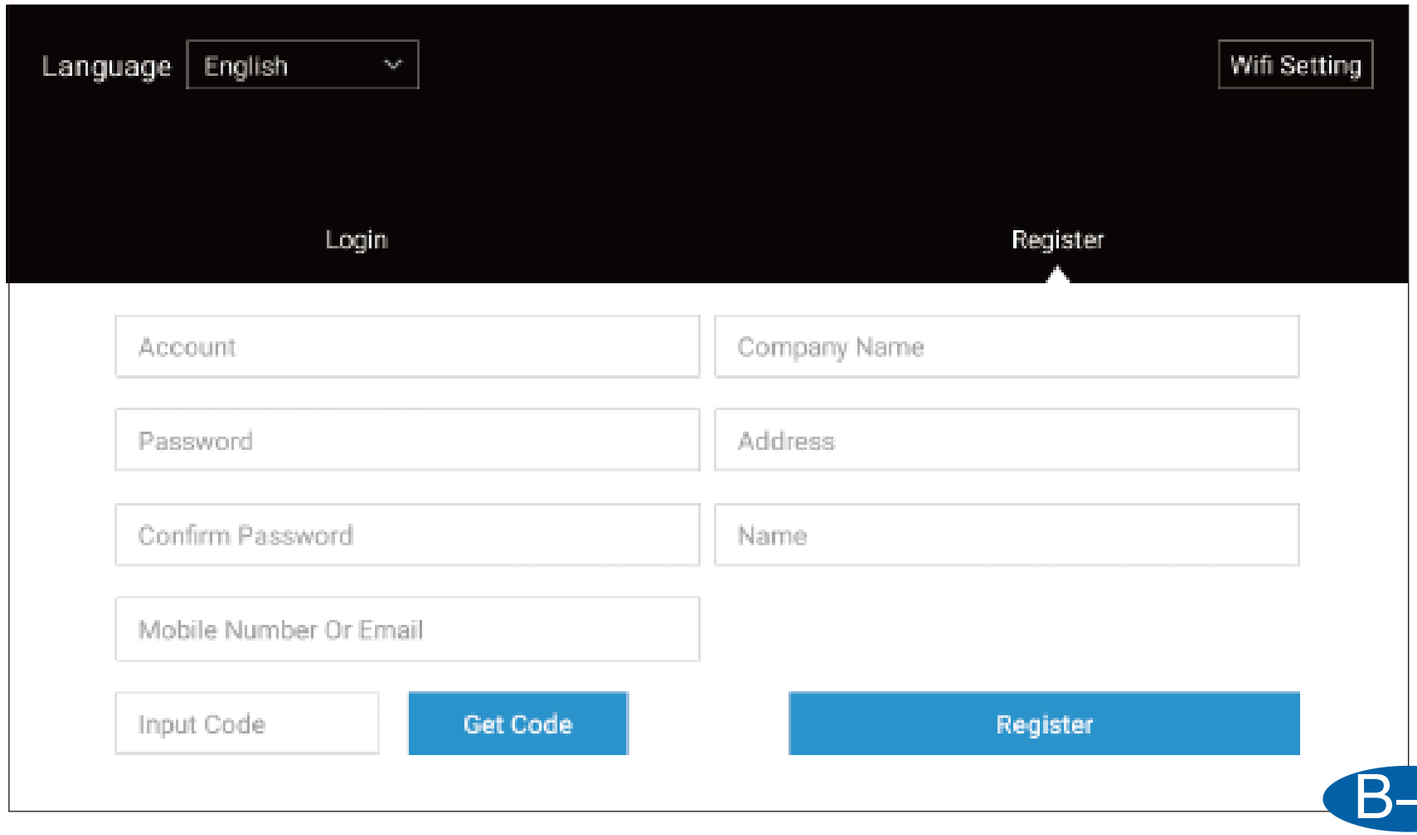

B–2

[Guide]

C

First time login or login after factory reset, instrument will enter into guide interface, we can set the instrument accordingly.



C–1

Mode Selection

CANCEL

Finish



Reflectance Mode



Transmittance Mode

1/6

Previous

Next

C–2

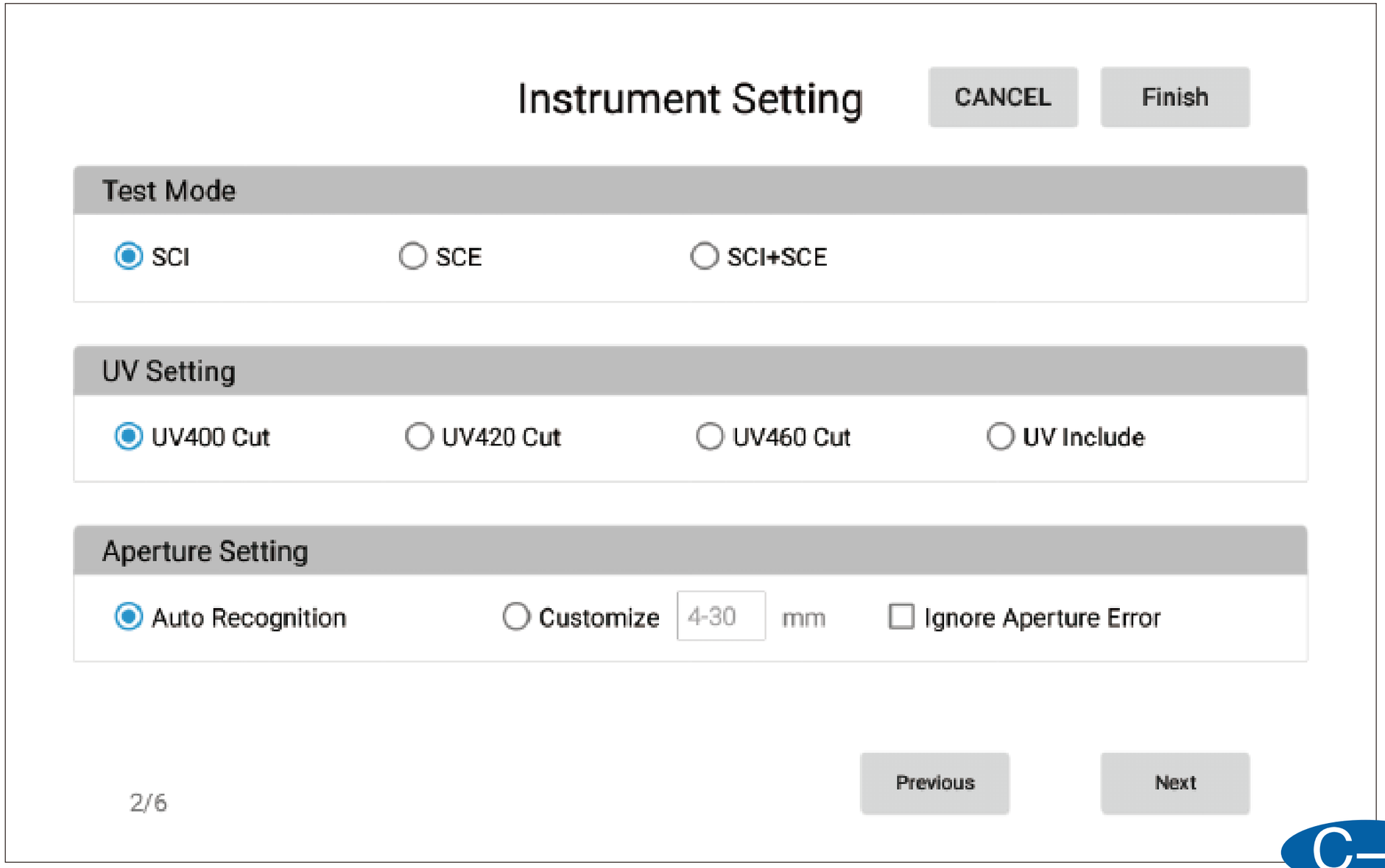
Instrument Setting
CANCEL
Finish
Test Mode
SCI
SCE
SCI+SCE
UV Setting
UV400 Cut
UV420 Cut
UV460 Cut
UV Include
Aperture Setting
Auto Recognition
Customize
4-30
mm
Ignore Aperture Error
2/6
Previous
Next

C–3

Parameter Setting

CANCEL | FINISH

Illuminant&Angle (The second illuminant is for calculating the metamerism)

First	D65	10°
Second	A	2°

CMC(l:c)

l 2.0 c 1.0

CIE94

KL 1.0 KC 1.0 KH 1.0

CIE 2000

KL 1.0 KC 1.0 KH 1.0

3/6

Previous | Next

C–4

Tolerance Setting

CANCEL | Finish

CIE LAB&LCH | Hunter Lab | CIEDE2000 | CIE LUV | CMC(l:c)&CIE94 | Liquid | Haze | Temperature & humidity | Parameter ada

CIE LAB

			Upper Limit	Lower Limit	Between
dL*	±	2.0	White	Black	Pass
da*	±	2.0	Red	Green	Pass
db*	±	2.0	Yellow	Blue	Pass
dE*ab		2.0	Fail		Pass

CIE LCH

dC*	2.0	dH*	2.0

4/6

Previous | Next

C–5

Other Settings

CANCEL | Finish

Average

(•) Single Test ( ) Average Test

Save Setting

(•) Manual Save ( ) Auto Save

Naming Rules

Target | Target | + [x] Number + [ ] Date

Sample | Sample | + [x] Number + [ ] Date

Heating Die Setting

[ ] Enable Heating Fixture

TargetTem...

CurrentTe... 0.00℃

5/6

Previous | Next

C–6

Display Setting

CANCEL

Color Diff.
Data
Figure
Haze (transmission
Opacity
Metamerism
Liquid chromaticity
Find Similar Color
Masterbatch

CIELABCH
CIEDE2000
CIE94
CMC
Hunter Lab

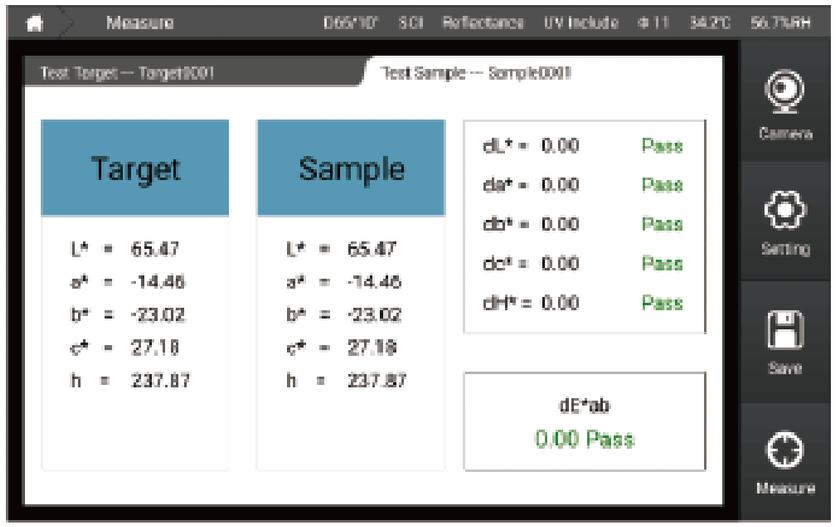

Previous

Finish

6/6

C–7

[Calibrate]

D–1

Black and White Calibration

When the instrument is in reflectance mode, user need do white and black calibration according to the software remind. Calibration valid time, temperature and humidity can be set in this page.



D–1/1

Calibrate D65/10° SCI / Reflectance UV400 Cut Φ30 22.2℃ 24.9%RH

Valid Time
8 Hours

Valid Temp.
±10°C

Valid Humidity
±15%RH

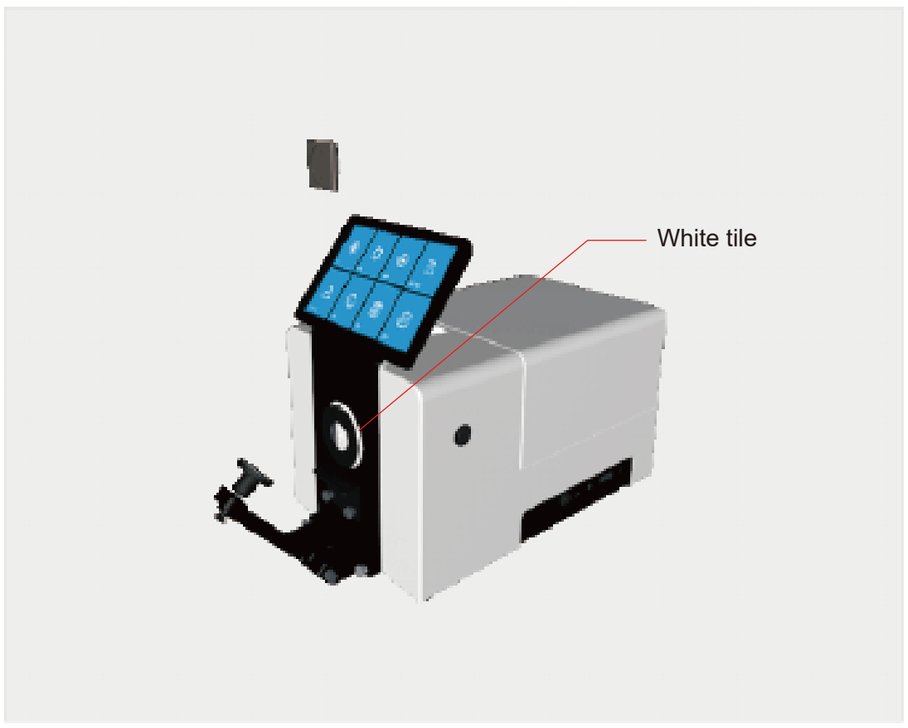

Step Two

White Calibration

White tile on reflectance aperture
click calibrate

Calibrate

Back Skip Quit

D–1/2

D–2

Green Calibration

After black and white calibration, software will remind for Green Check.
Green Check is used for verify the test result, it can be skipped.
Instrument software is with green tile value and user can also set the green tile value from green tile setting interface.
Note: Green calibration needs to be done in UV400 cut-off mode.

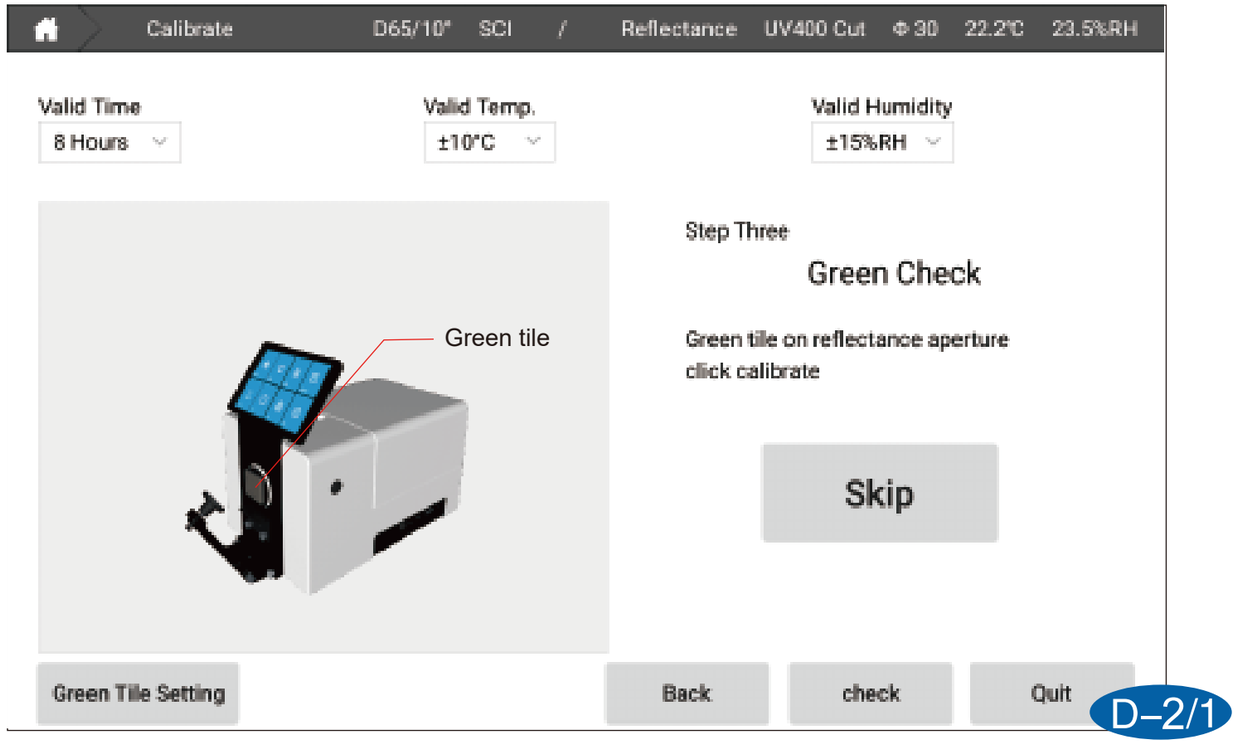

D–2/1

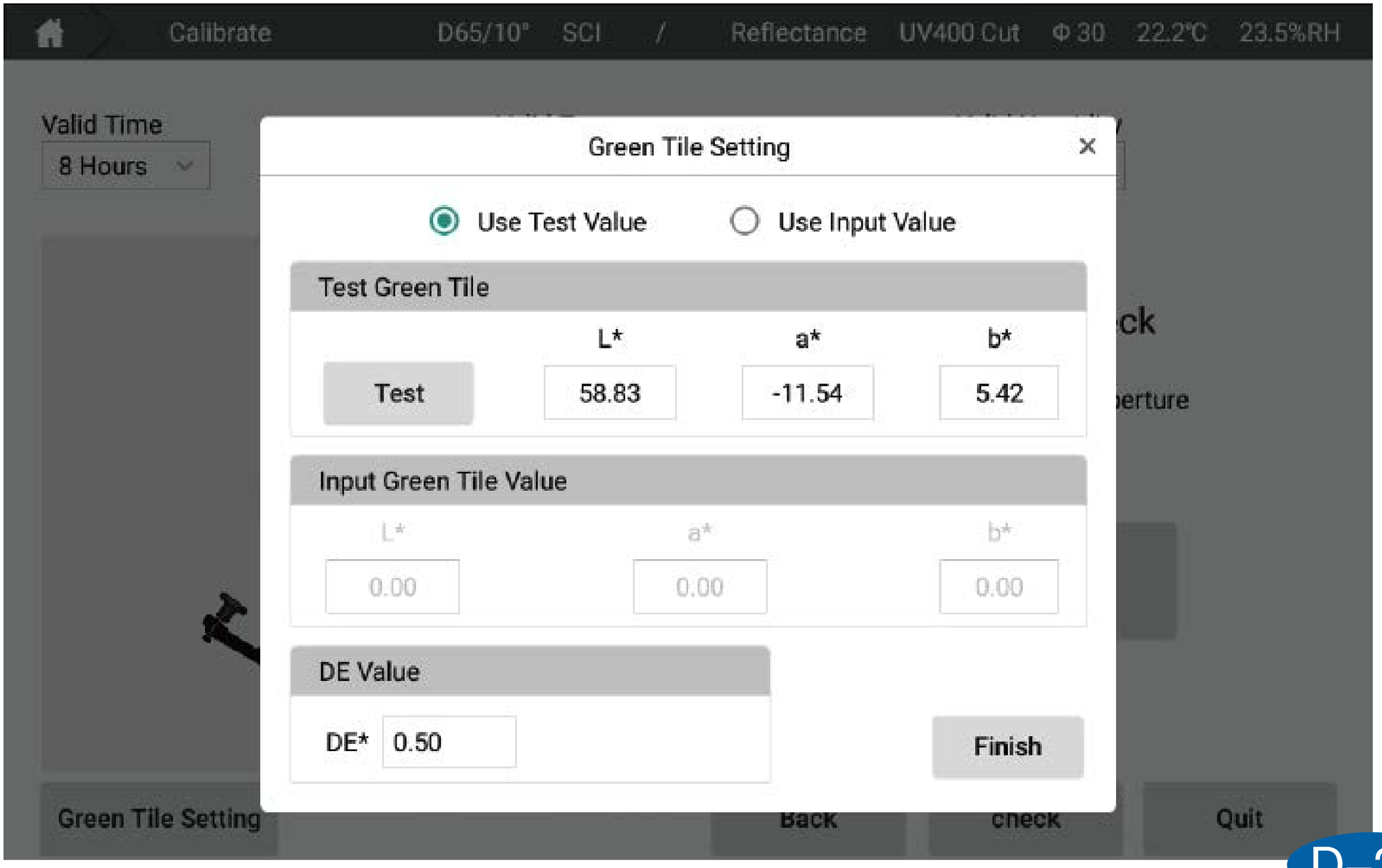
Calibrate
D65/10°
SCI
/
Reflectance
UV400 Cut
Φ 30
22.2℃
23.5%RH
Valid Time
8 Hours
Green Tile Setting
Use Test Value
Use Input Value
Test Green Tile
L*
a*
b*
Test
58.83
-11.54
5.42
Input Green Tile Value
L*
a*
b*
0.00
0.00
0.00
DE Value
DE*
0.50
Finish
Green Tile Setting
Back
check
Quit

D–2/2

D-3

100% Calibration

User can do 100% calibration according to the samples. If it is liquid sample,glass cell with distilled water for 100% calibration. If sample is solid,user need make sure nothing is in measurement aperture for 100% calibration.

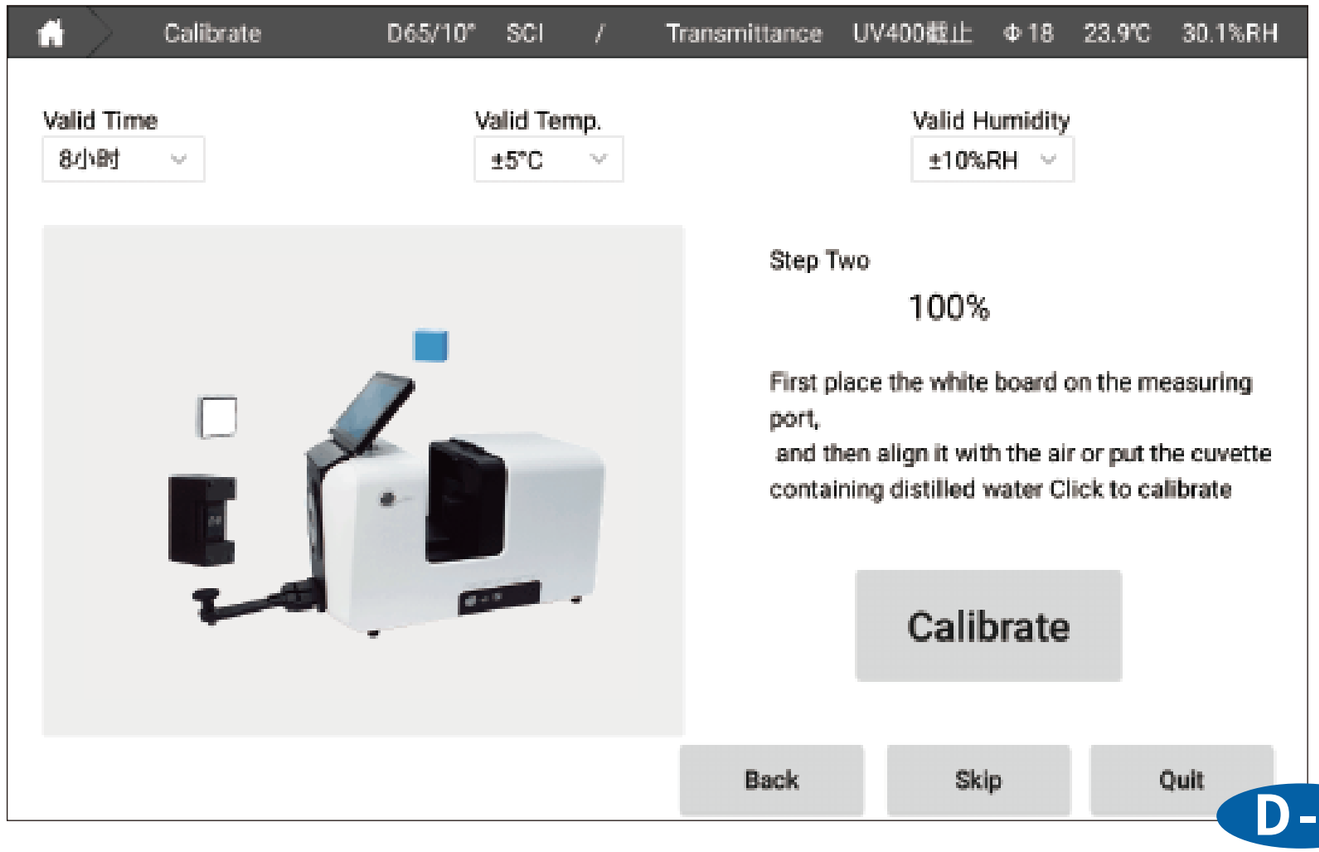

D-4

Automatic calibration Settings

On the home screen, go to "Settings" and click "Automatic Calibration Settings".

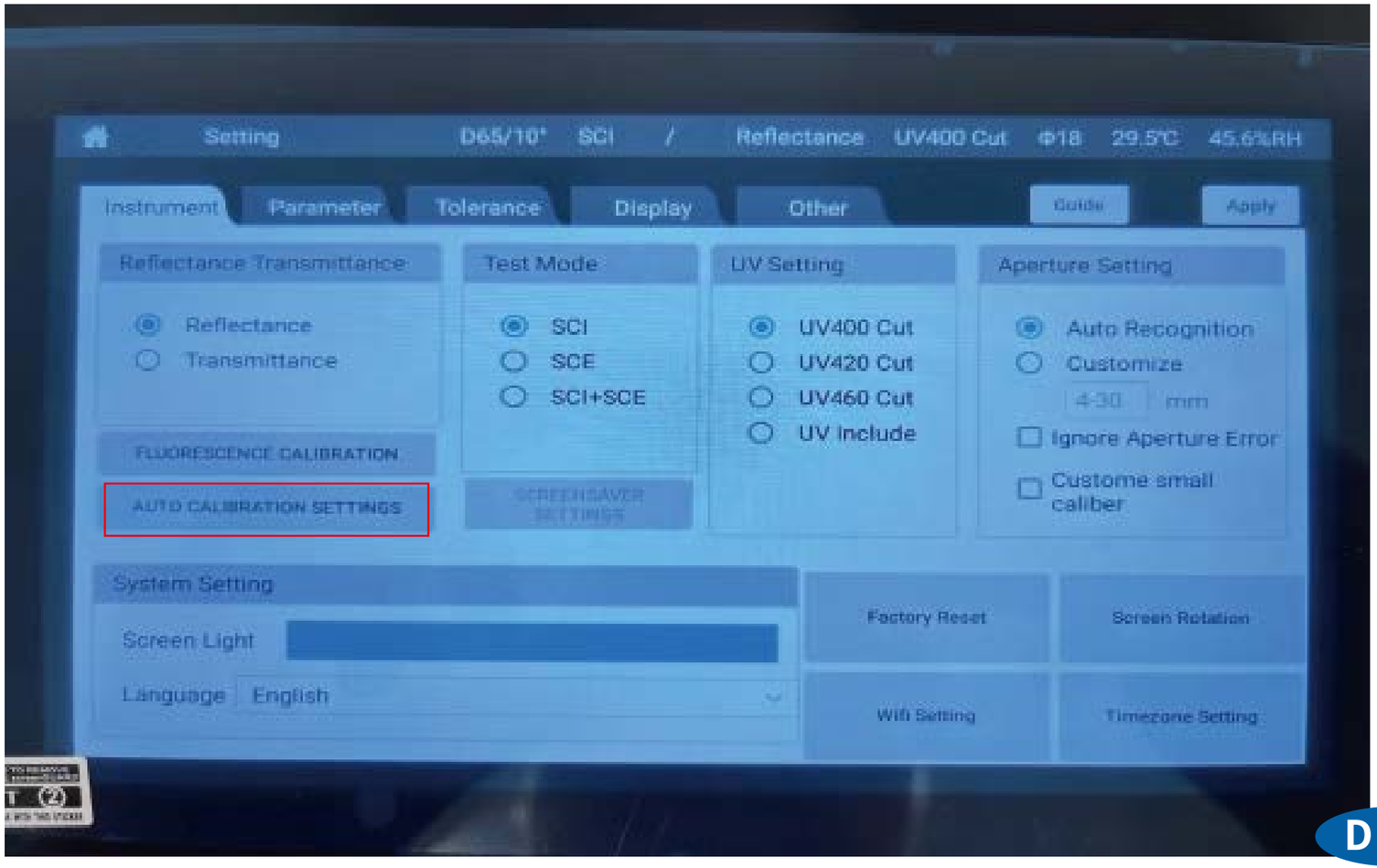

D-4/1

In the "Automatic Calibration Settings" interface, you can enable or disable the automatic calibration function, or click "Automatic calibration" to perform calibration immediately.

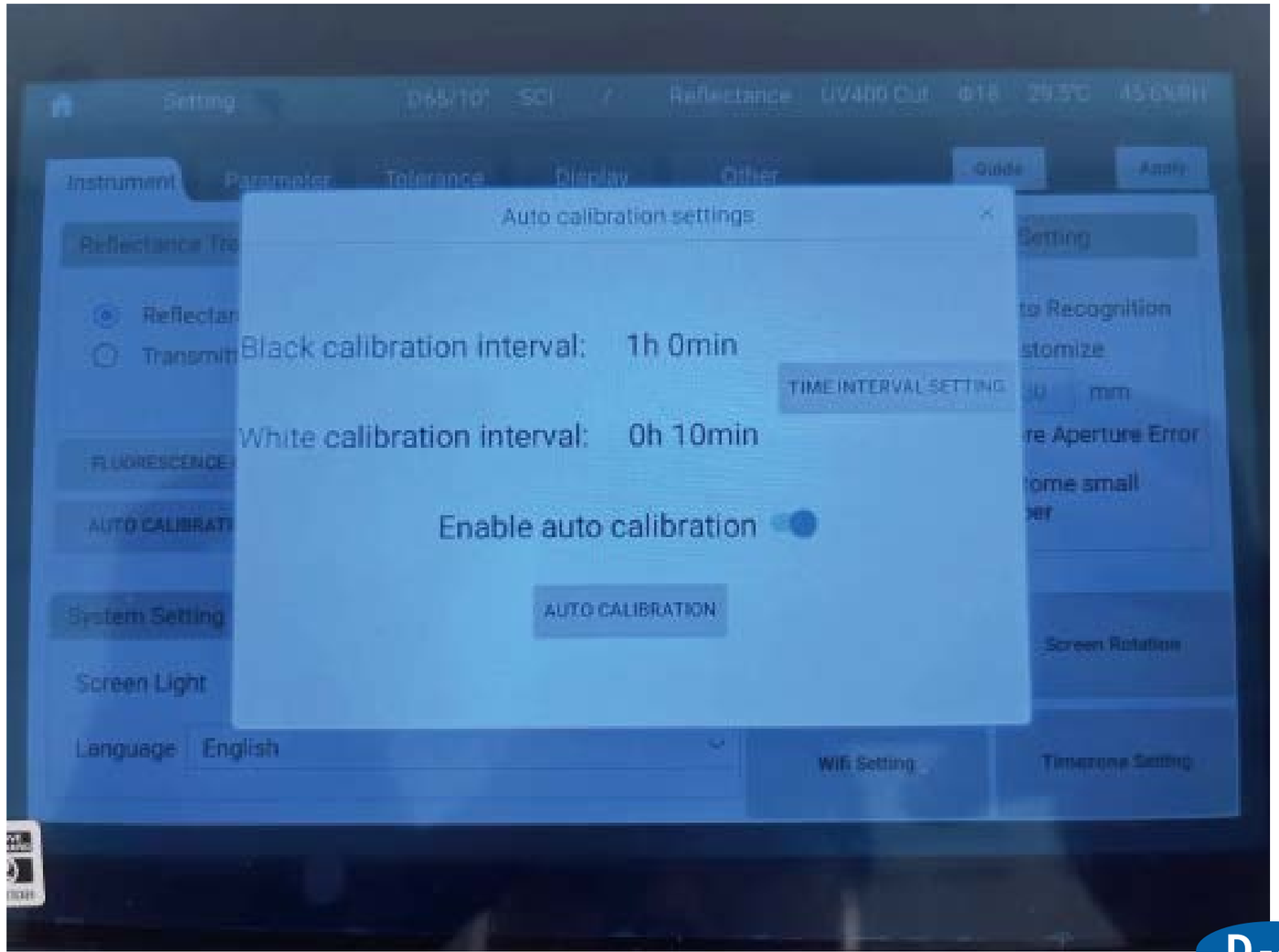

D-4/2

Click "Time Interval Settings" to set the time interval for black calibration and white calibration respectively.

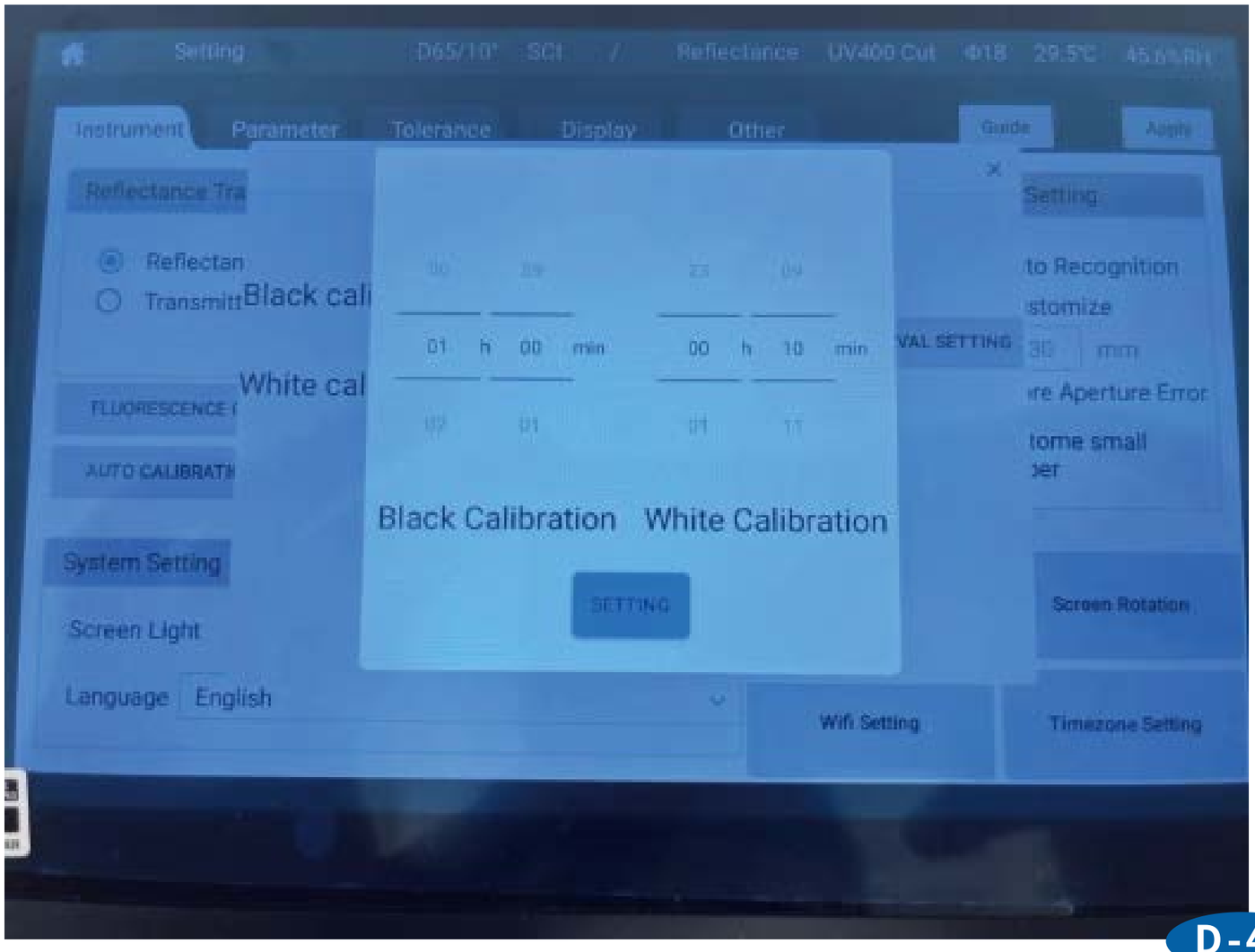

D-4/3

[Measure]

There are 3 measure modes target test,sample test and other test mode (opacity, find similar color).

E–1

Target Test

In the main interface, click measure to enter into target measurement interface, after placed the sample, click measure on right botton or press "test" button on instrument, test result will show on screen.

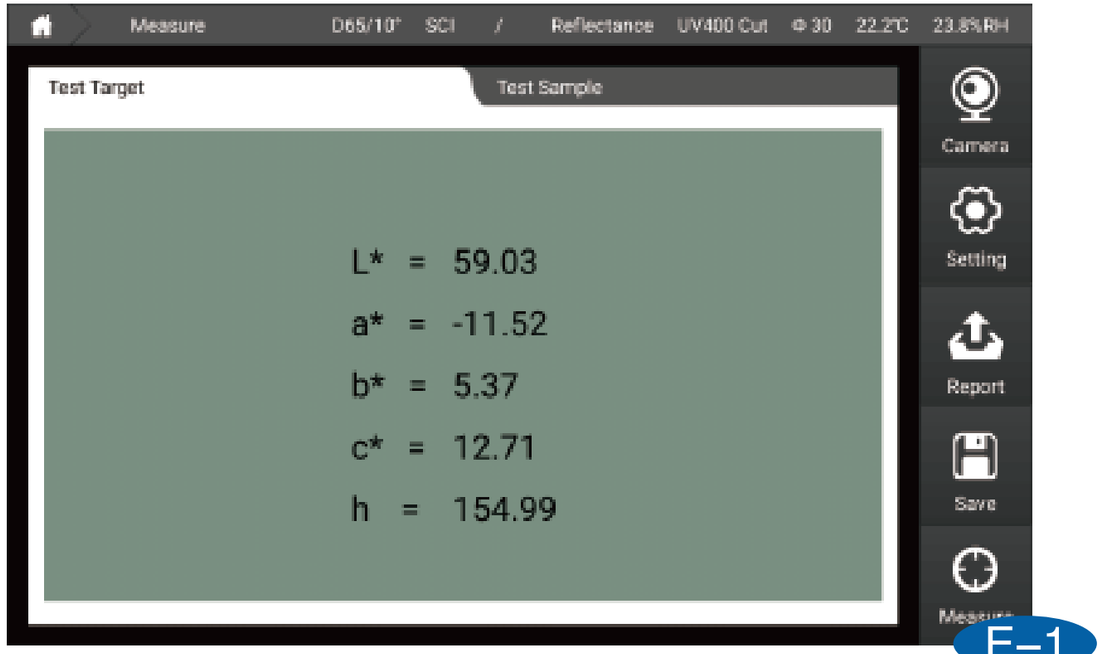

E–1

E–2

Sample Test

In target test interface, click sample to enter into sample measurement interface. After the sample is placed on the measurement aperture, click measure on the right bottom or press "test" button for sample measurement.

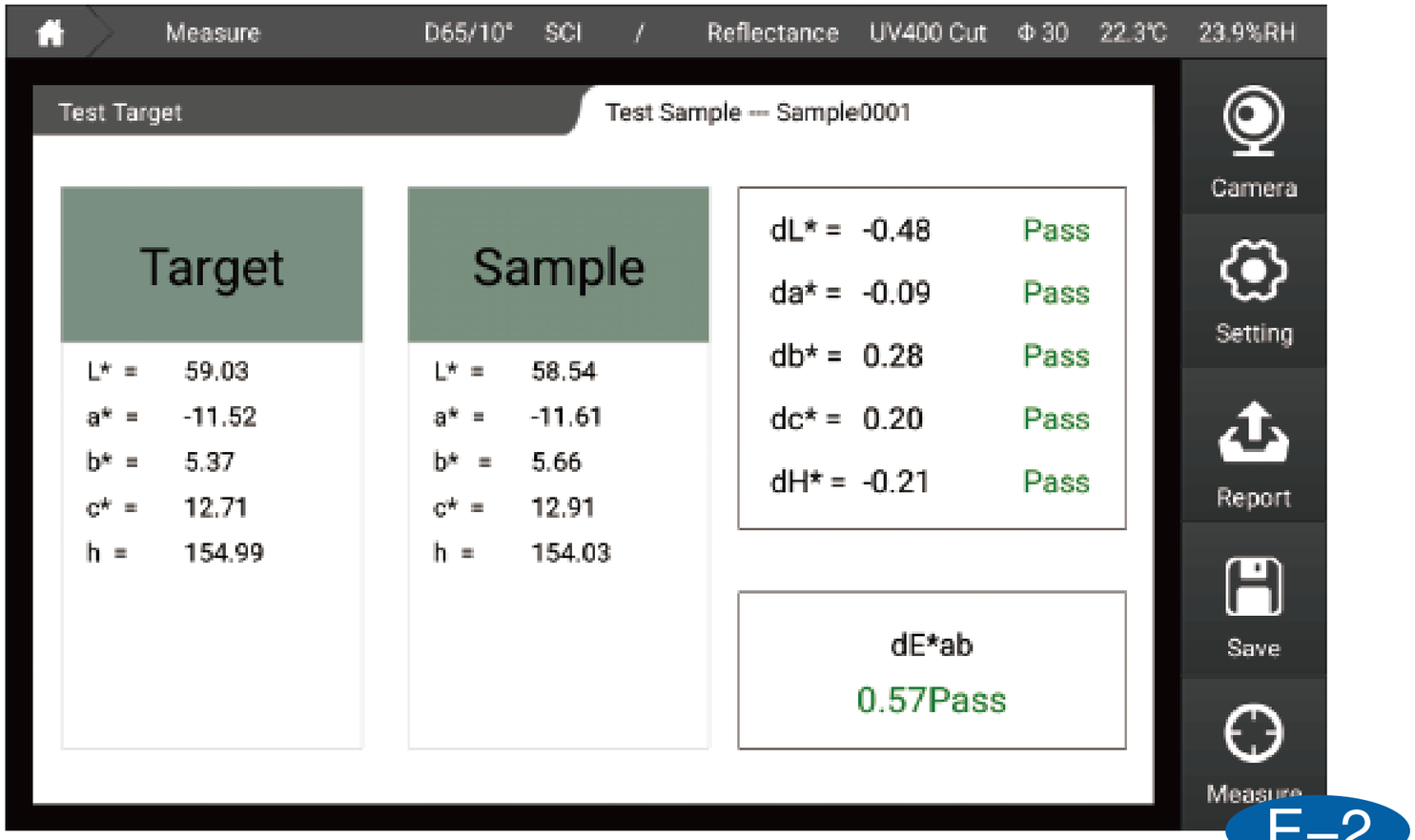

[Setting]

From setting interface, user can set test mode,parameter,tolerance,instrument display,save method,name rules,average test,etc. After revise, click apply.

F-1

Setting

1. In the Transflective window, select Reflect or Transmit to set the working mode of the instrument.
2. In the test mode window, select SCI or SCE or SCI+SCE to set the test mode of the instrument.
3. Under the UV setting window, you can set UV or UV400 cutoff, UV420 cutoff, and UV460 cutoff.
4. In the aperture setting window, if you select automatic recognition, you can automatically set the aperture configured by the factory at this time, and automatically switch the lens position; if you select custom, then enter a value within 4 to 30 in the custom window, and select ignore at the same time If the caliber is wrong, you can use the built-in caliber measurement.

Fluorescence calibration, you can manually import or import LAB, whiteness, spectrum and other types of data from EXCEL for fluorescence calibration.

(1) Click Fluorescence Calibration, check and confirm the pop-up prompt, and select OK to perform fluorescence calibration.

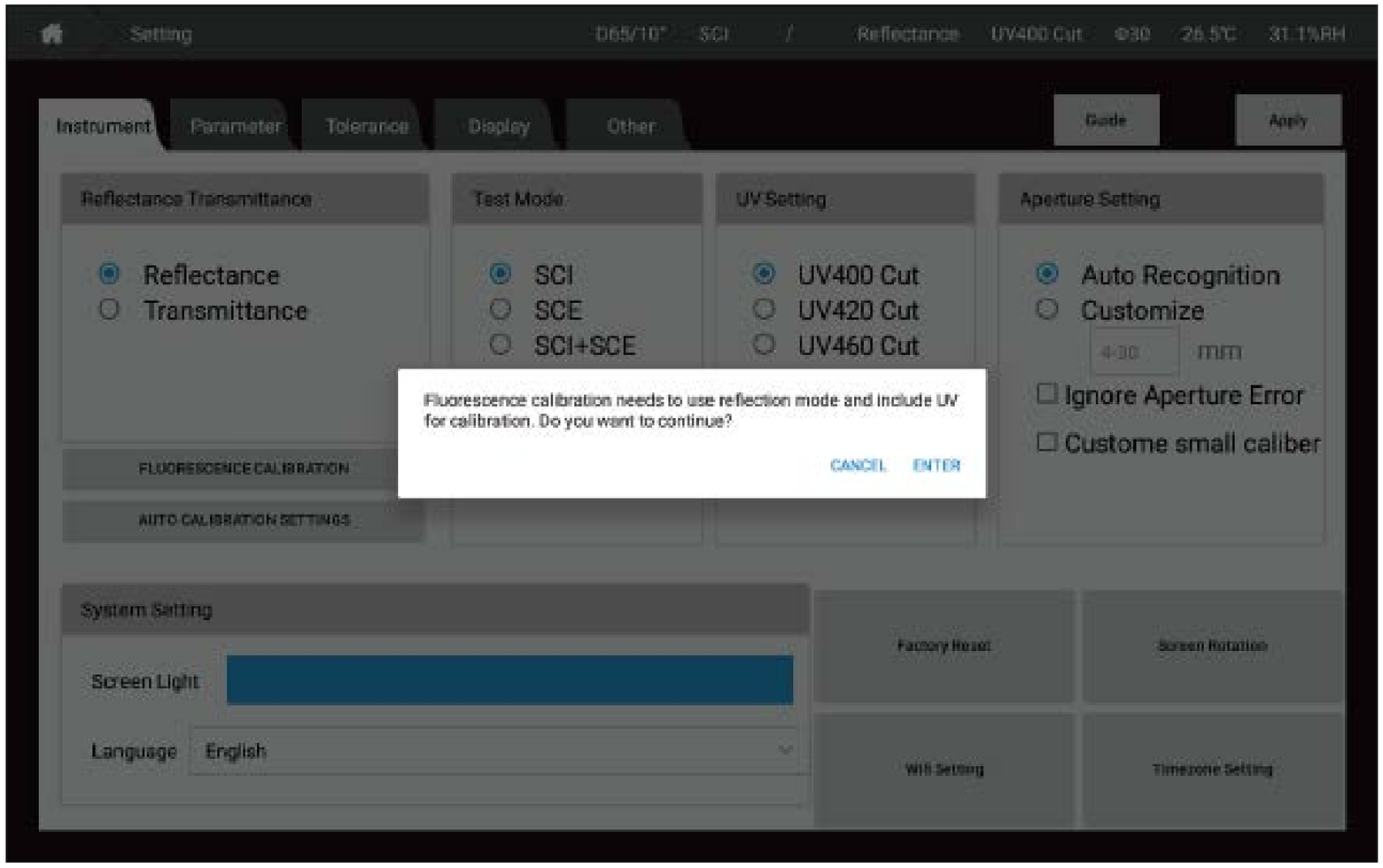

(2) Enter the fluorescence calibration interface, please follow the prompts to perform a black and white calibration, and the green calibration can be skipped.

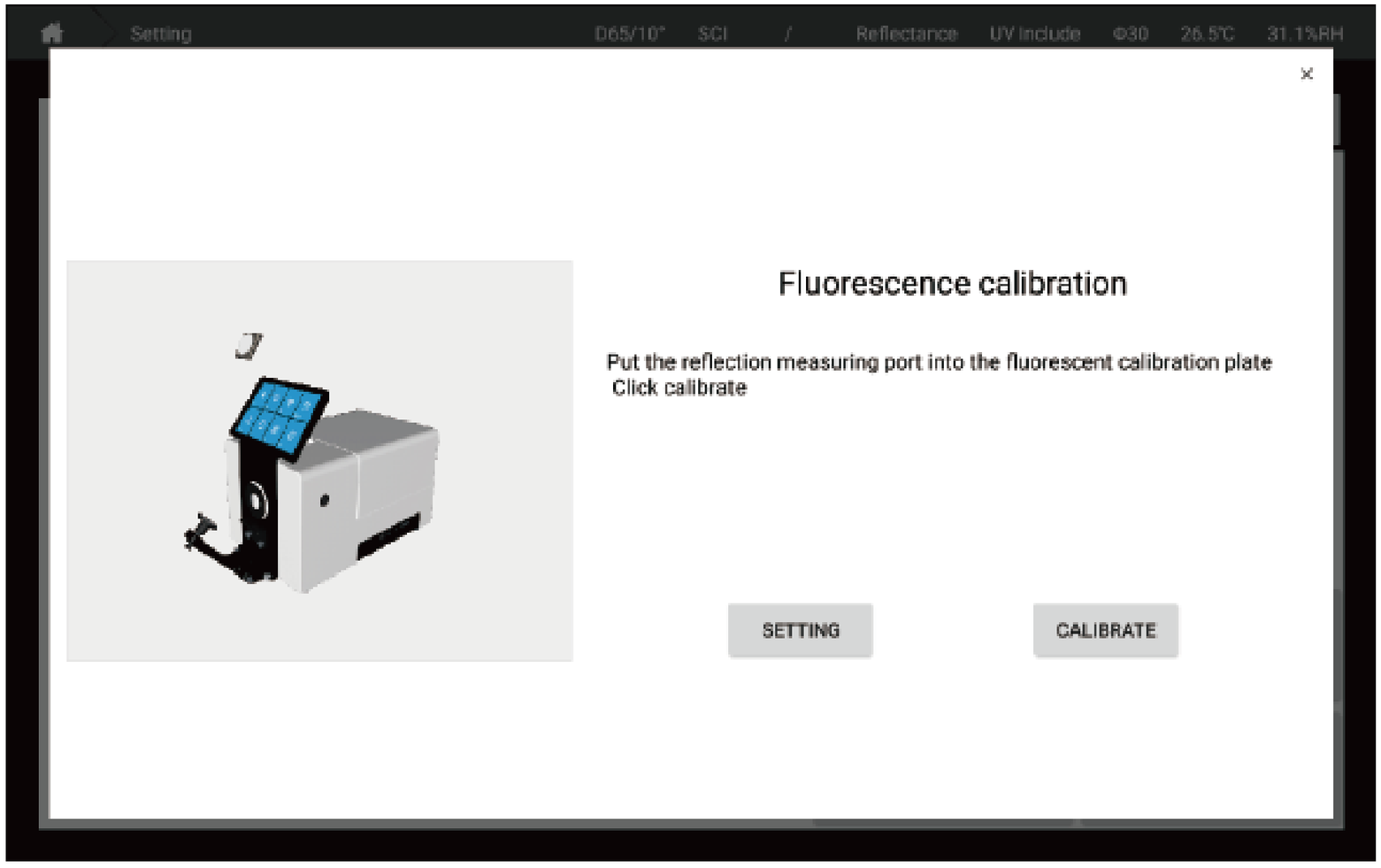

(3) After clicking Settings, the admin password will be requested. Defaults to the instrument's serial number (case sensitive).

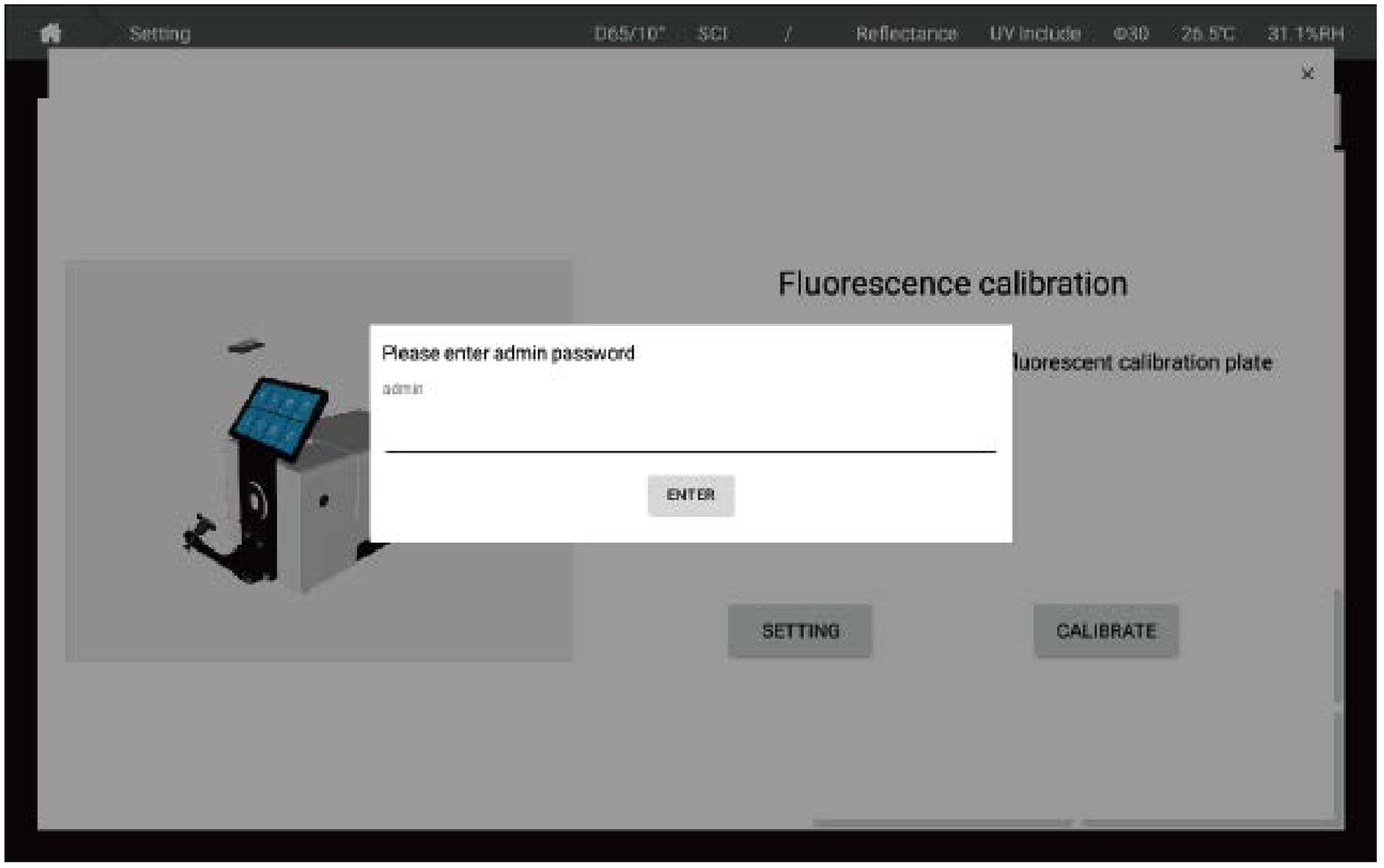

(4) After entering the admin password correctly, the fluorescence calibration setting can be performed. It can be imported manually or imported from EXCEL.

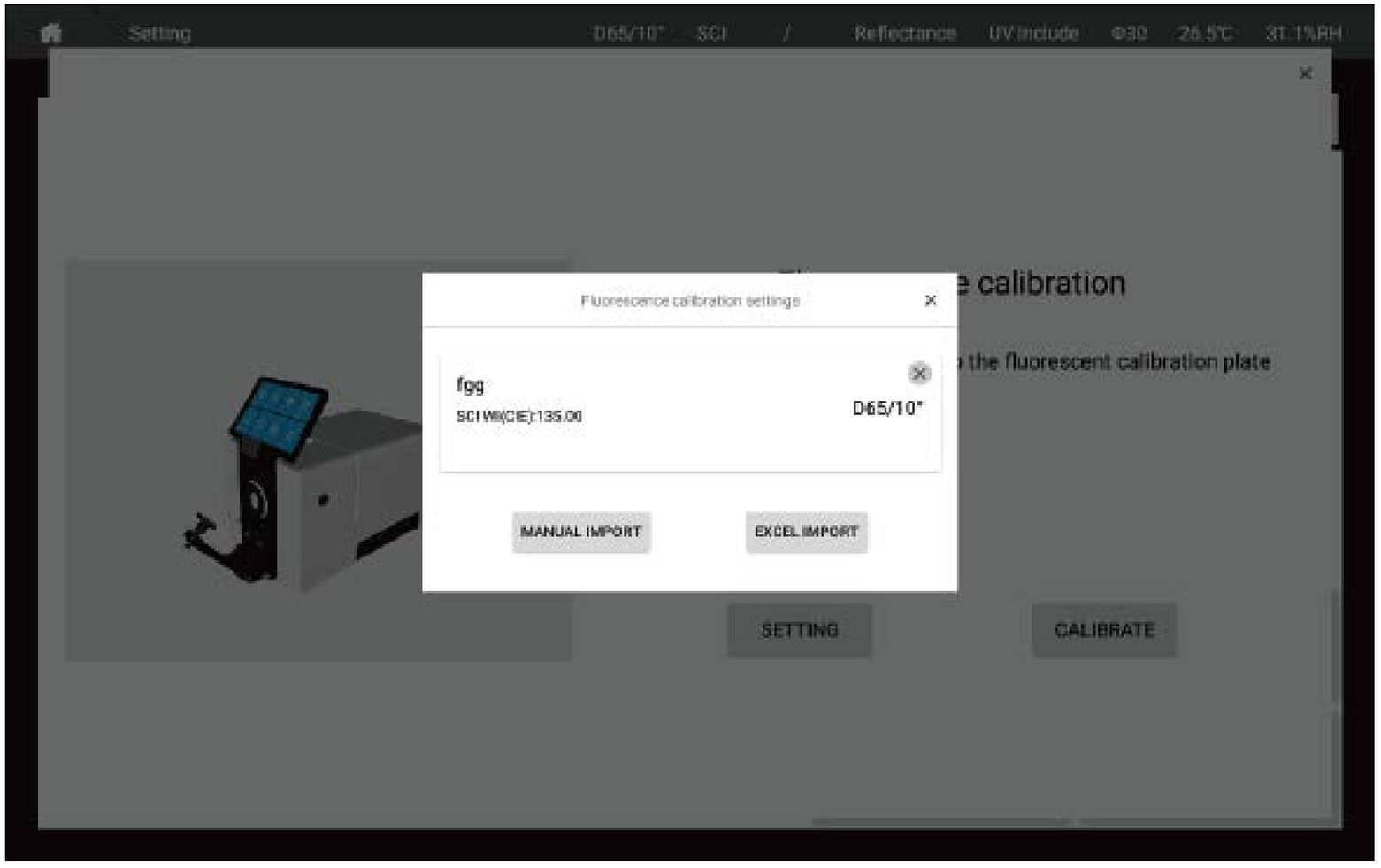

(5) Click Manual Import to automatically ask the imported data type.

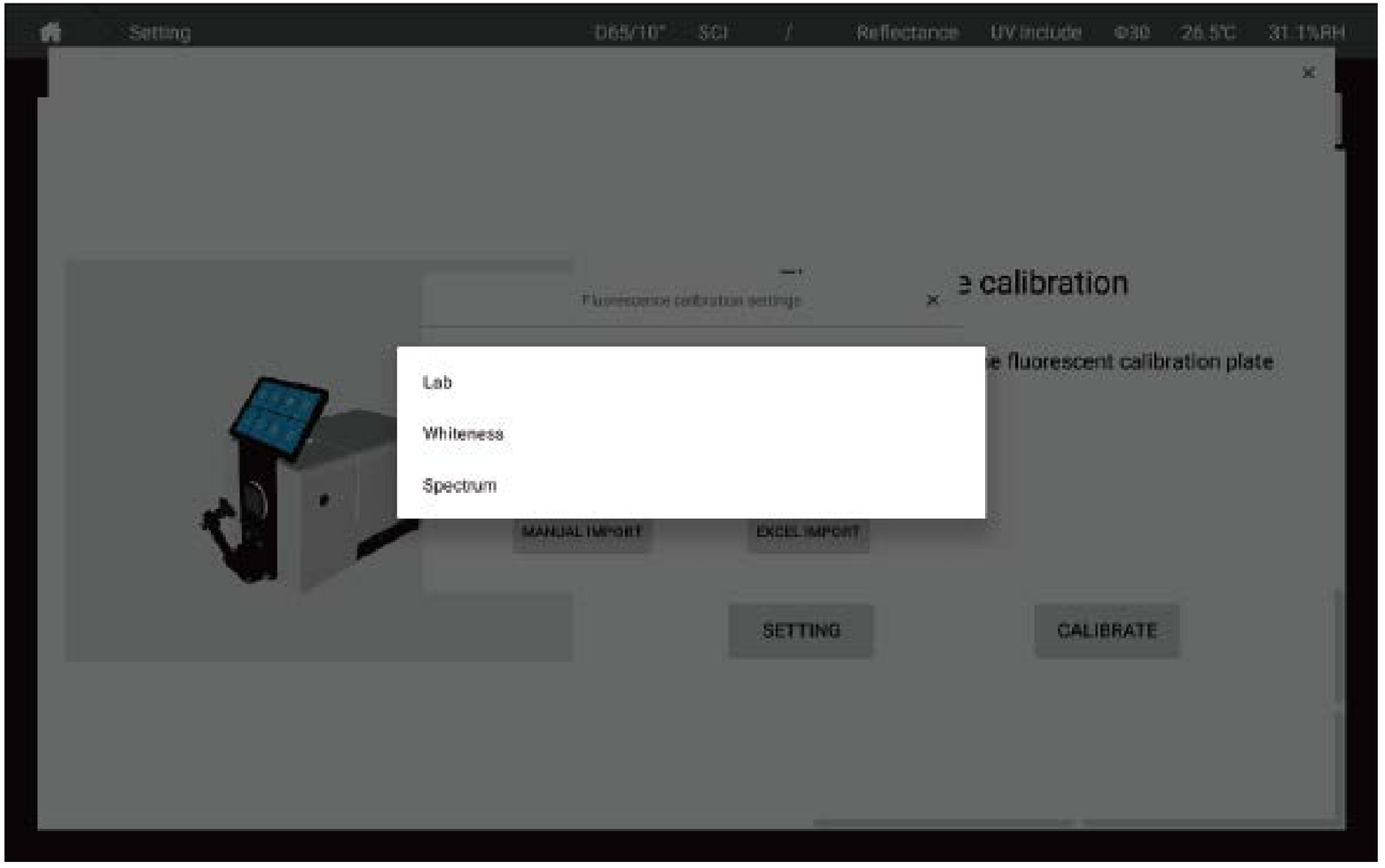

(6) Lab import. You can customize the name of the imported data. After selecting SCI or SCE, you can input the L*, a*, b* values of the corresponding mode.

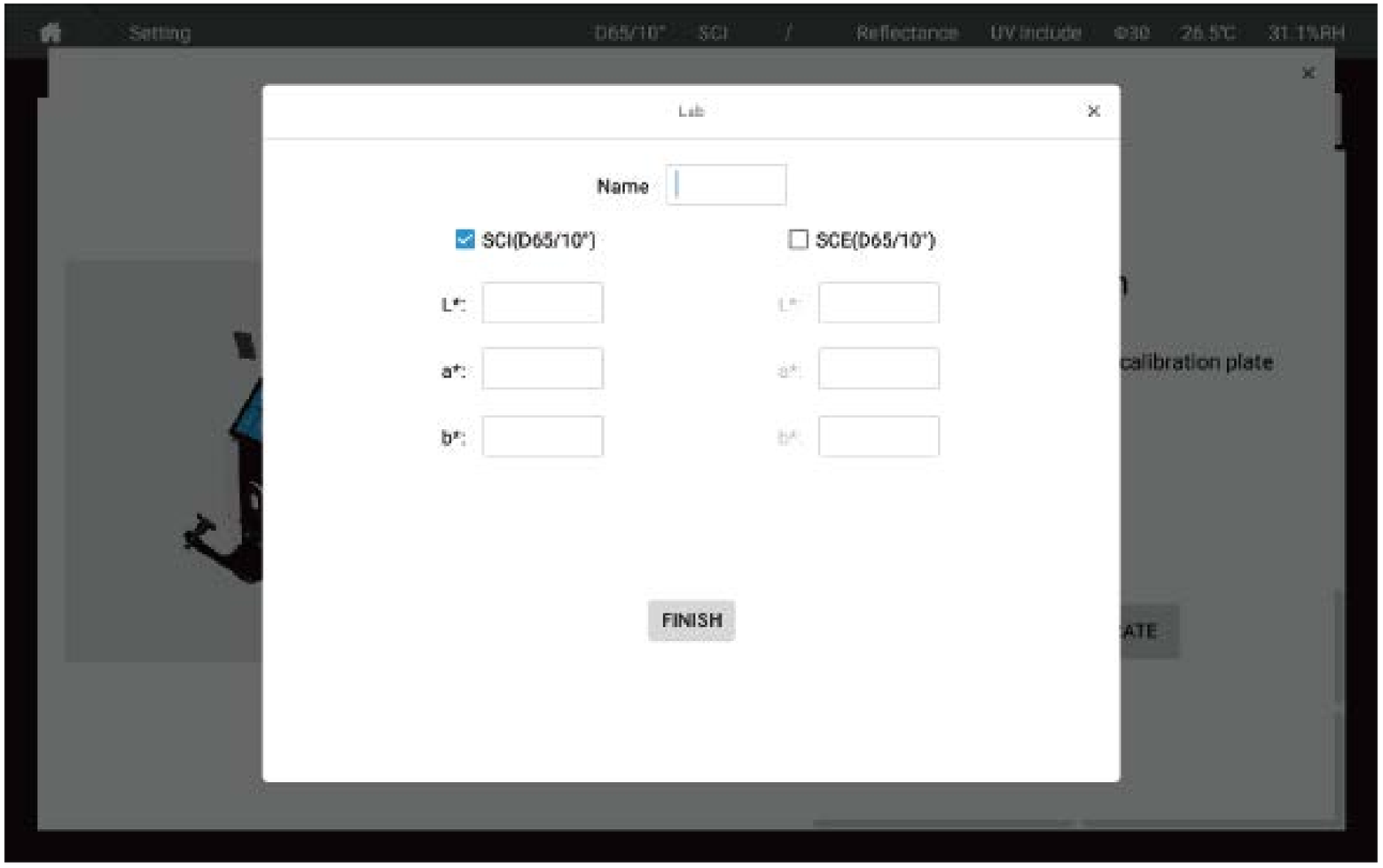

(7) Import of whiteness. You can customize the name of the imported data. Select the imported whiteness type (CIE, Hunter, etc.). After selecting SCI or SCE, you can enter the whiteness value of the corresponding mode.

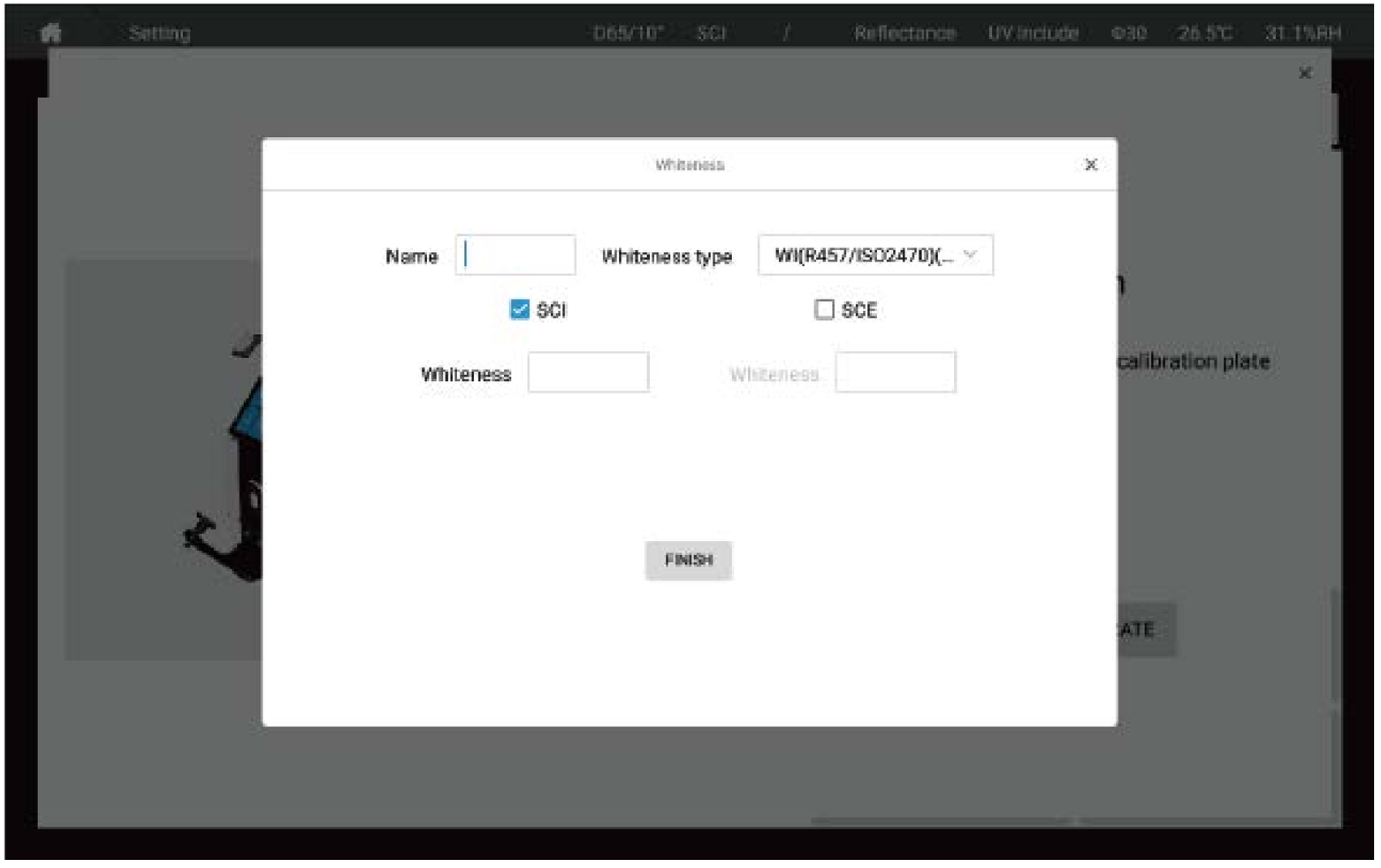

(8) Spectral import. You can customize the name of the imported data. After selecting SCI or SCE, you can enter the reflectance values under different wavelengths of the corresponding mode.

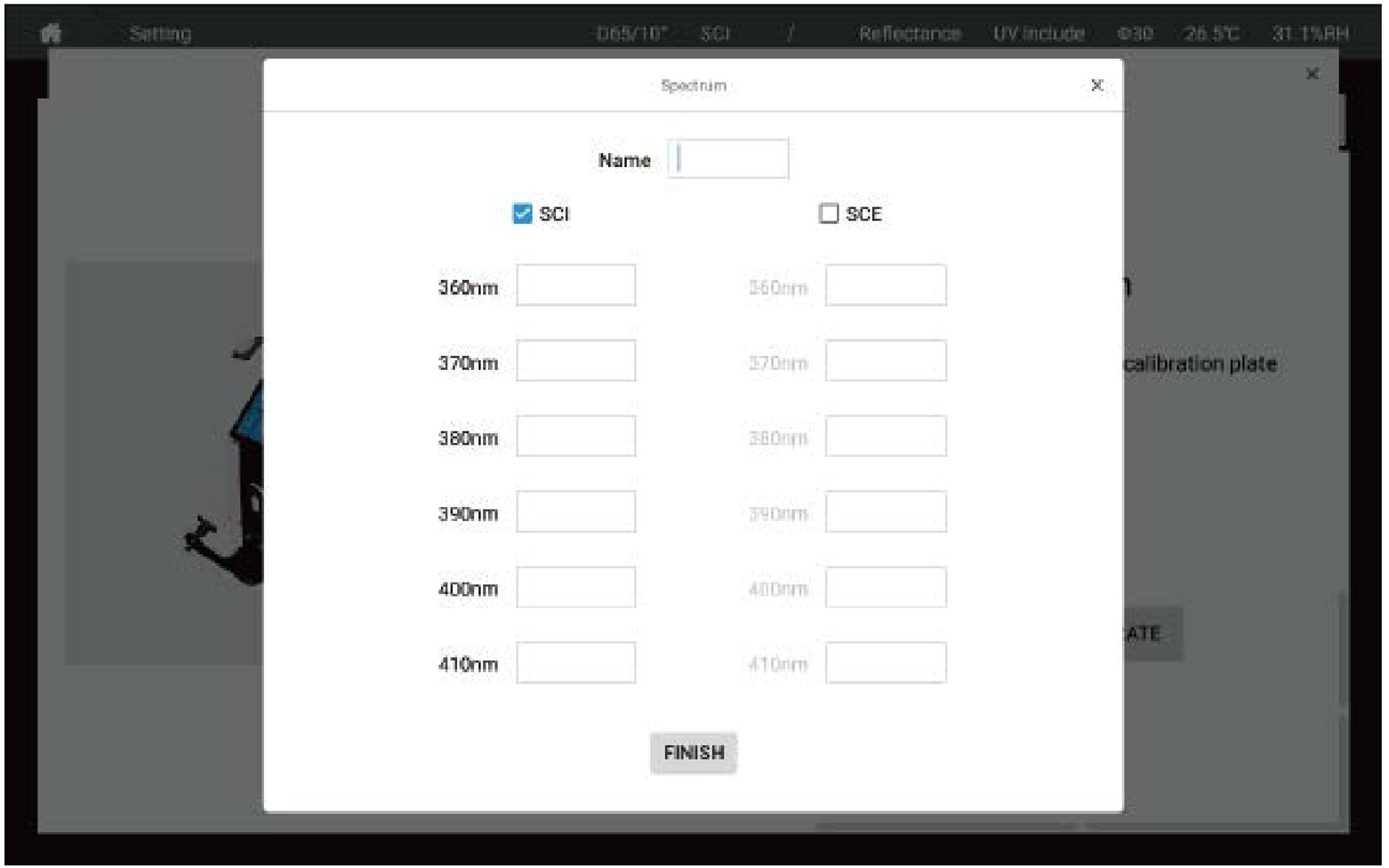

(9) EXCEL import. After selecting the EXCEL file to be imported, click Import to import directly.

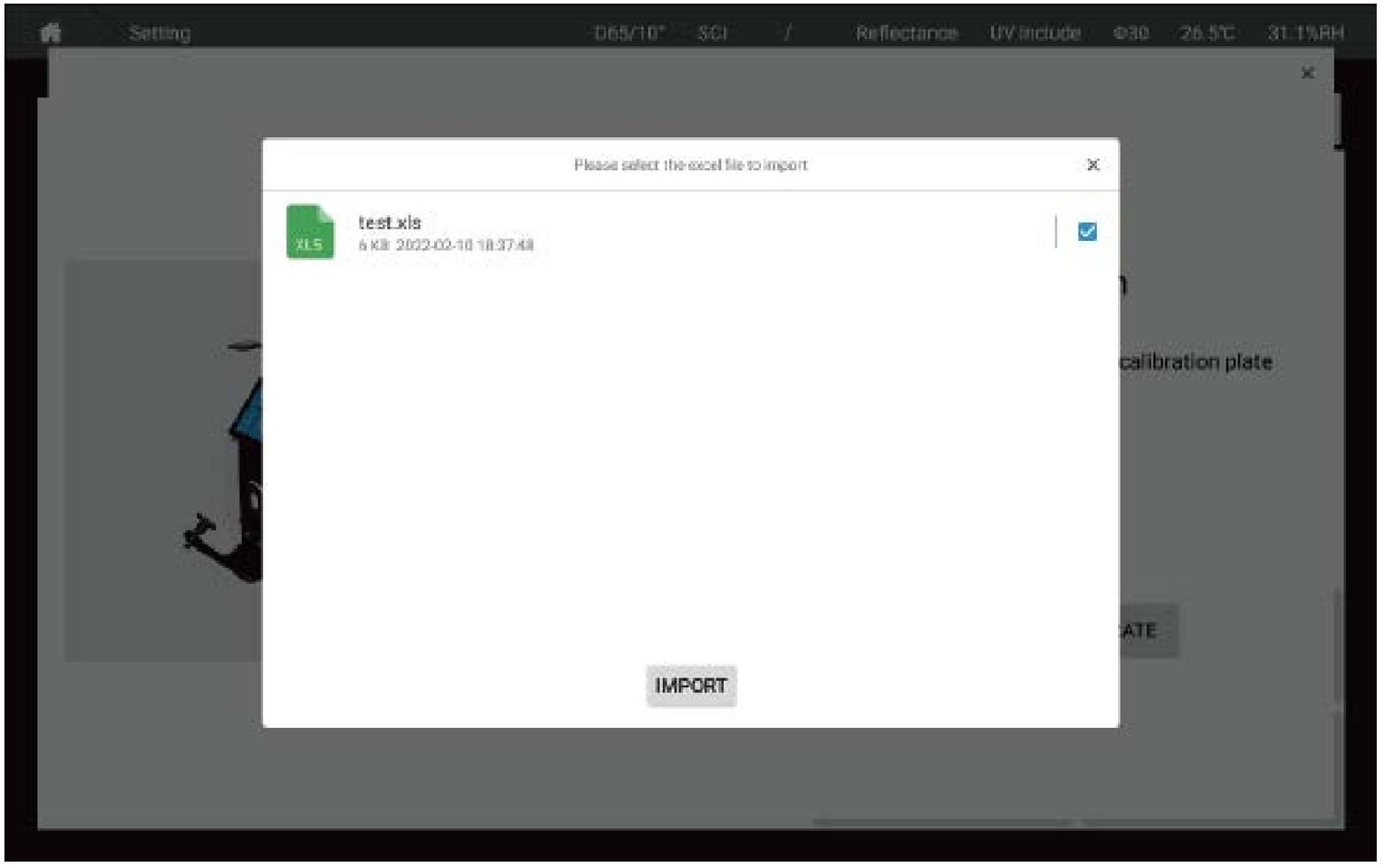

Auto calibration settings, you can customize the black and white calibration interval, and whether to enable automatic calibration and measurement calibration.

(1) Click Auto Calibration Settings, you can customize the black and white calibration interval, and choose whether to enable automatic calibration and measurement calibration.

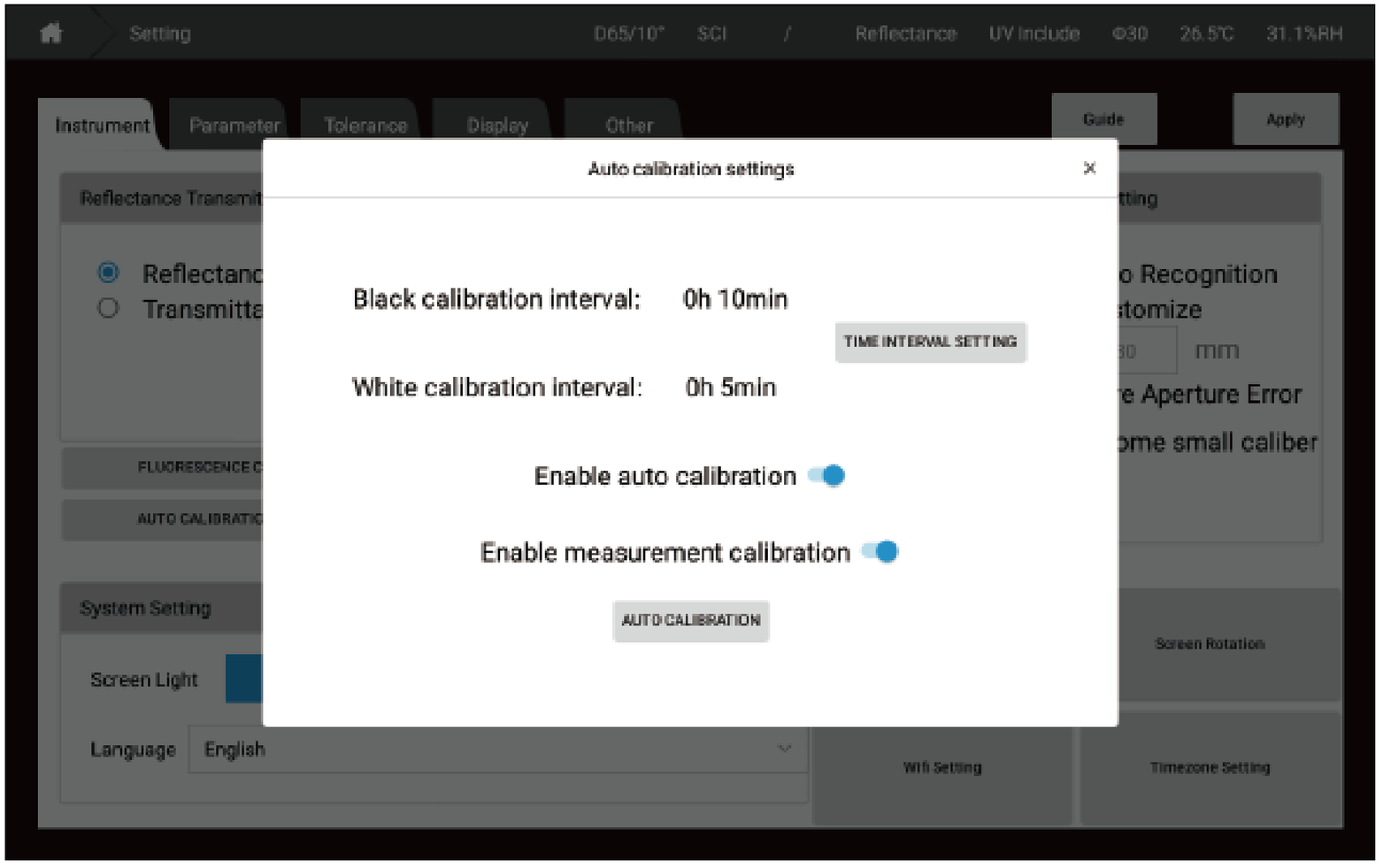

(3) Enable or disable automatic calibration, measurement calibration. After enabling automatic calibration, the instrument will automatically perform a black calibration and a white calibration after each power-on. After enabling measurement calibration, the instrument will periodically perform black calibration and white calibration during idle time during normal operation. When disabled, black and white calibration will not happen automatically at any time.
①The screen backlight and software display language can be set in the system setting window.
②Click restore to factory settings to restore the instrument to the factory settings.
③Click the screen rotation button, the screen will rotate 180°.
④Wifi settings, connect or manage available wireless networks.

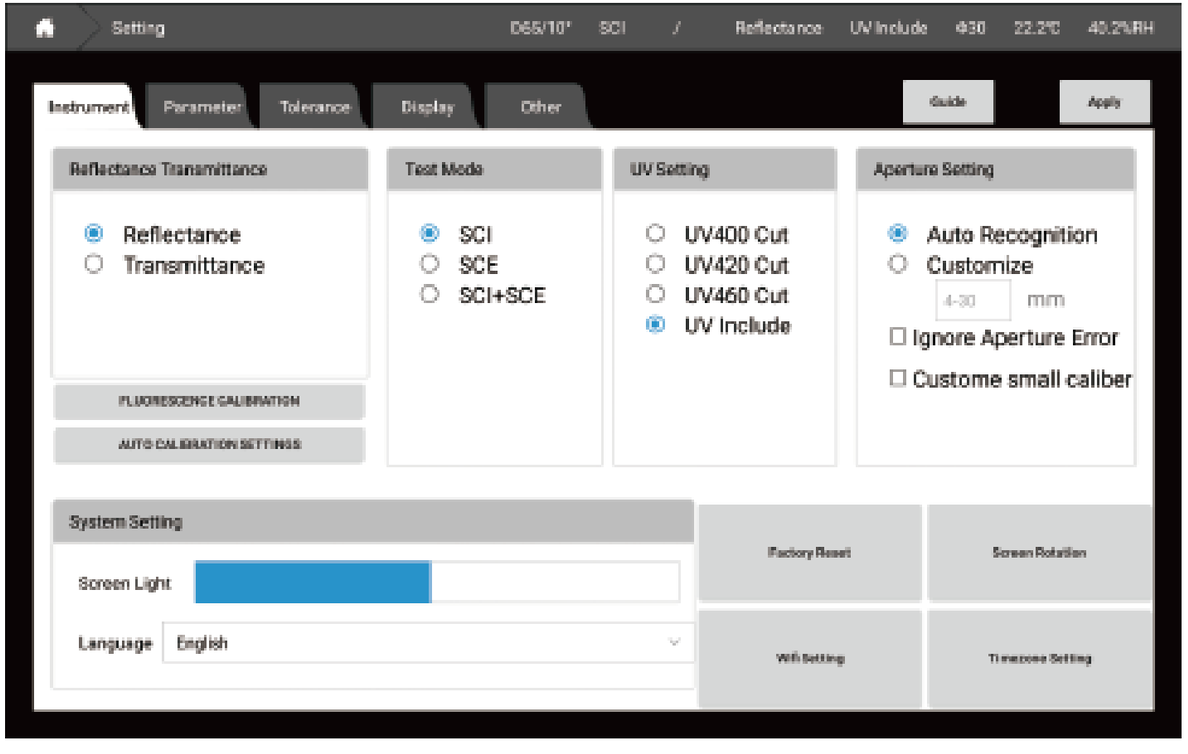

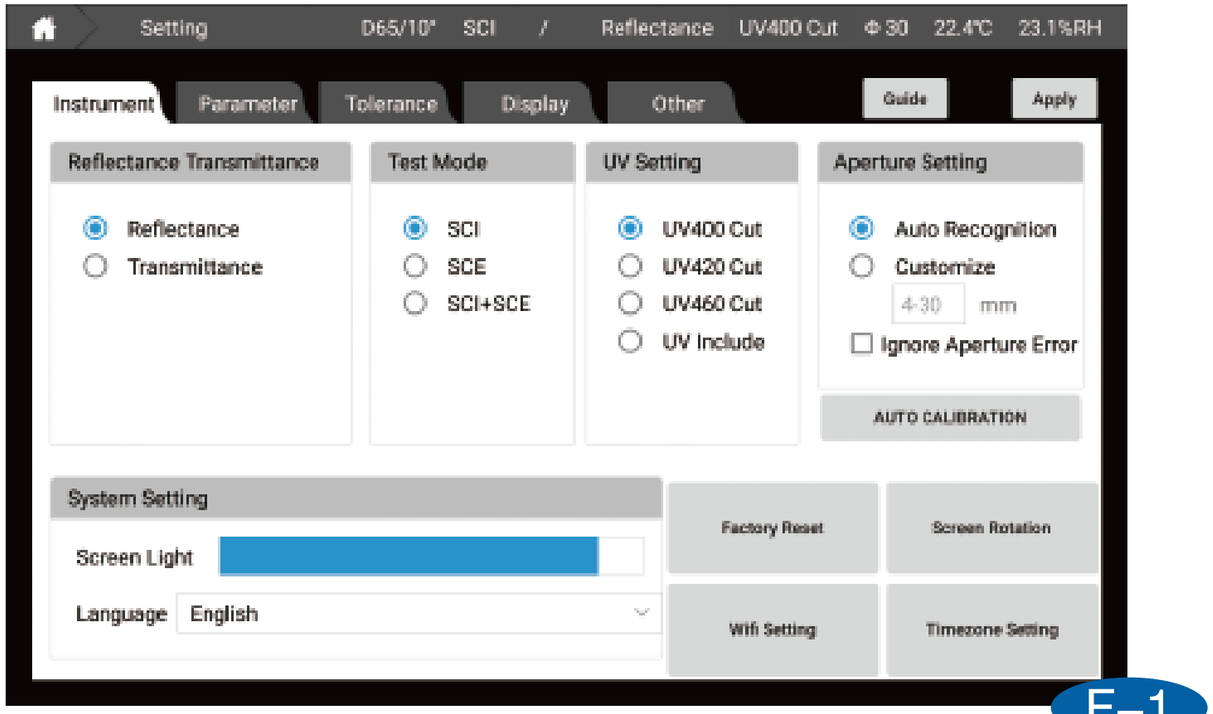

F–1

F–2

Parameter Setting

Parameter setting, user can set the following parameters.

1. Illuminants & Angles : User can set illuminant and angle for calculating the test result. The first illuminant and angle is the calculation data for all modes. The second illuminant is for calculating metamerism. (Note:Find similar color and my color illuminant and angle is fixed D65/10°)

2.CMC(l:c):l and c value can be set
3.CIE94:The coefficient KL,KC and KH value of Color different formula CIE91 can be set.
4.CIE2000:The coefficient KL,KC and KH value of Color different formula CIE2000 can be set.

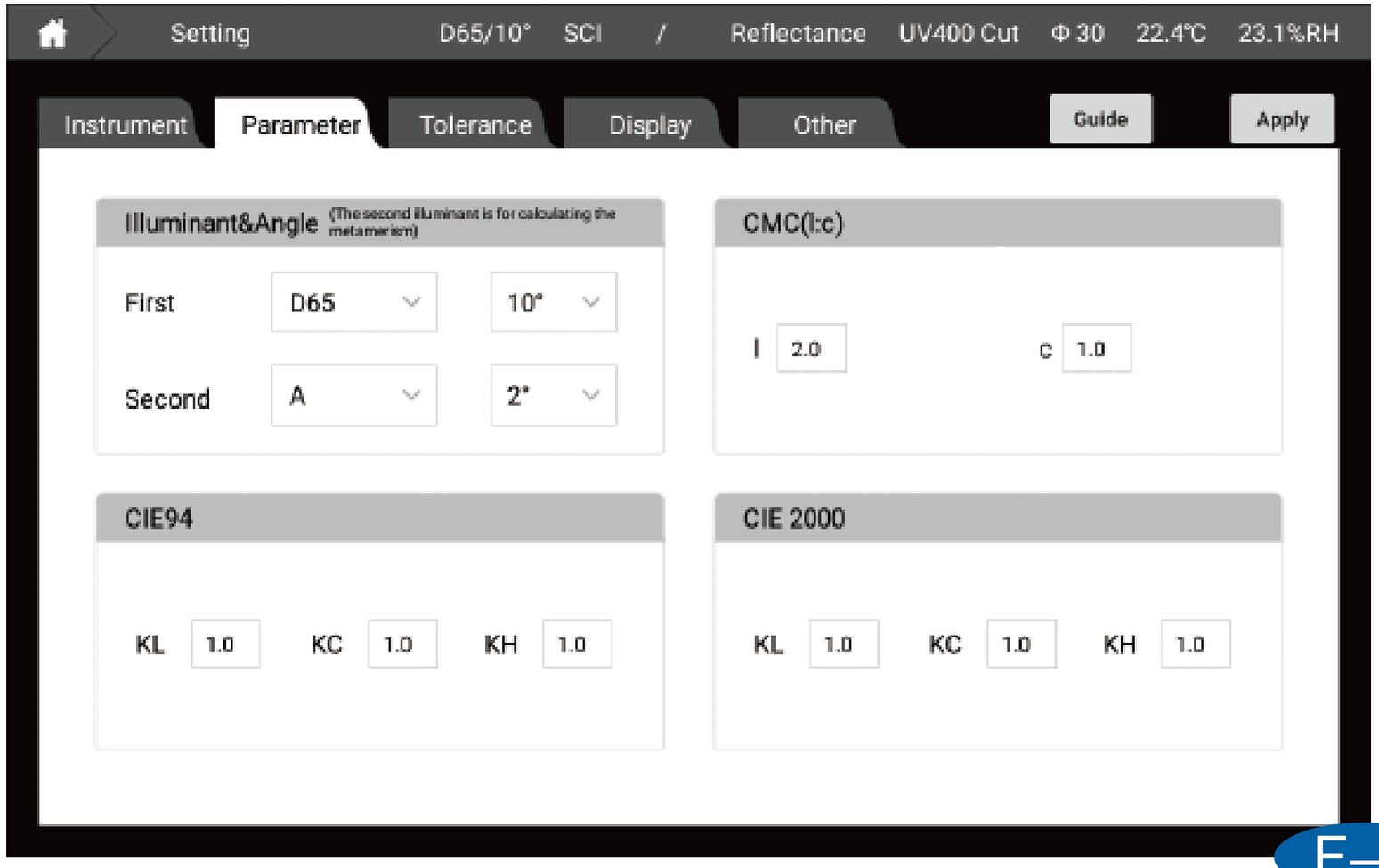

F–2

F–3

Tolerance Setting

Tolerance is for judging if the sample's color is pass or not comparing with target. When the difference value is larger than tolerance, it will show fail, when the difference value is smaller than tolerance, it will show pass.
We can choose different color difference formula and set tolerance. (CIE Lab page allow user to set the remind words)

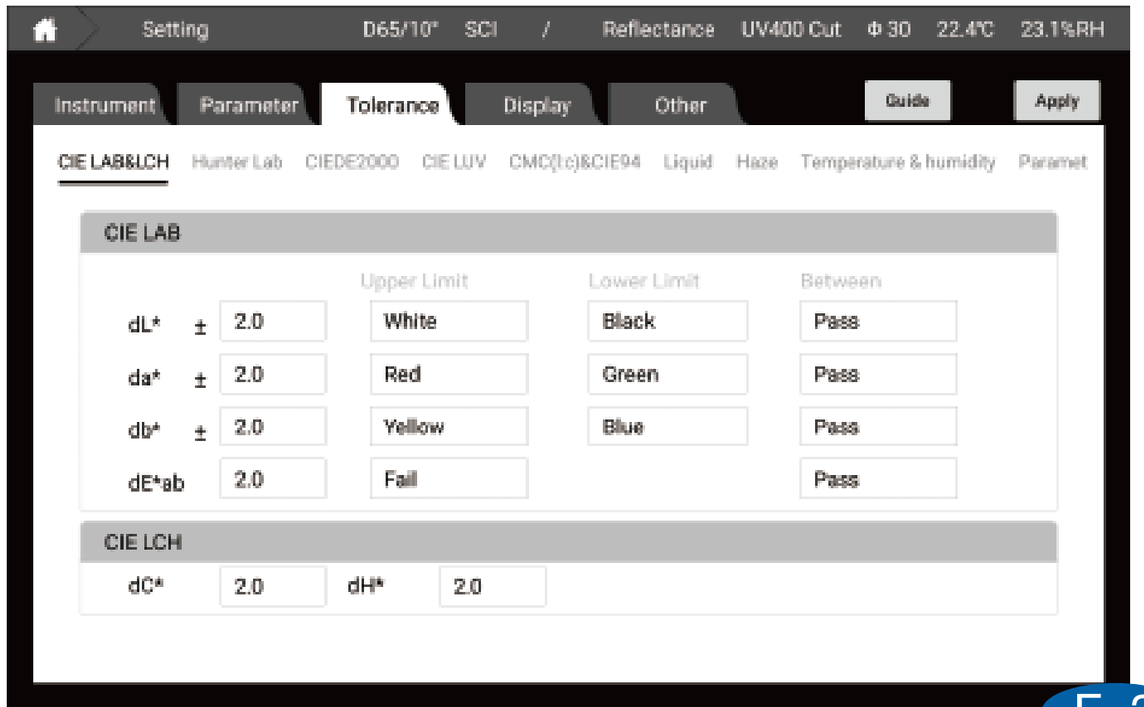

F–3

F–4

Display Setting

Display setting can set the content shows in measure interface. The following display can be set:

1.Color difference: CIE LABCH, CIE DE2000,CEI94,CMC,Hunter Lab

2.Data:It will show all parameters that the instrument can measure (expect haze and opacity)

3.Figure: CIE Lab, Yxy, Luv, reflectance/transmittance, K/S curve,absorbance curve.

4.Haze:measure the haze and total transmittance of transparent and translucent materials

5.Opacity:measure opacity

6.Metamerism: for measuring metamerism

7.Liquid chromaticity: Saybolt, ASTM color, Pt-Co, Gardner color

8.Find similar color: user can find similar color from "my color"

9. Color Master Batches: color test of color master batches

10. Titanium Dioxide: color test of color master batches

11. Paste: color test of pasty materials

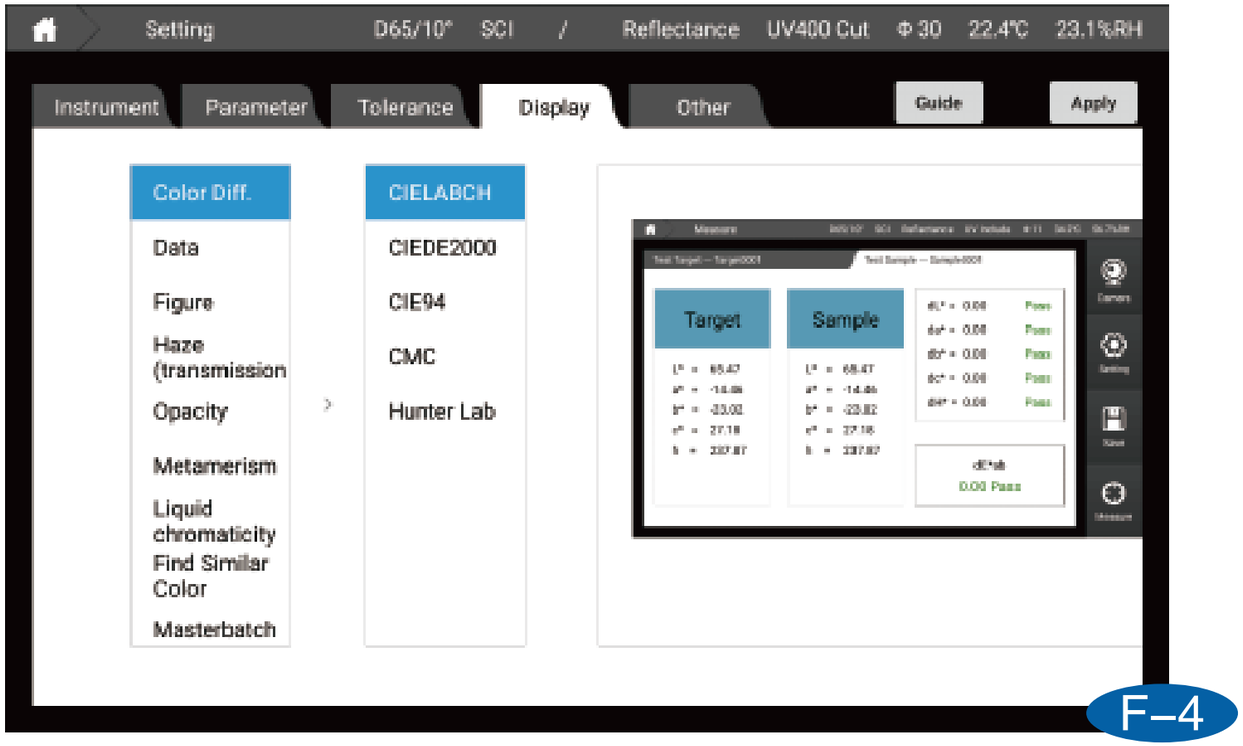

F–5

Other

1.Average setting : User can set single test or average test
2.Save Setting: User can set manual save or auto save
3.Naming Rules: User can choose the rules for naming the sample
4.Heating mold setting:User can start heating fixture and set the heating temperature.

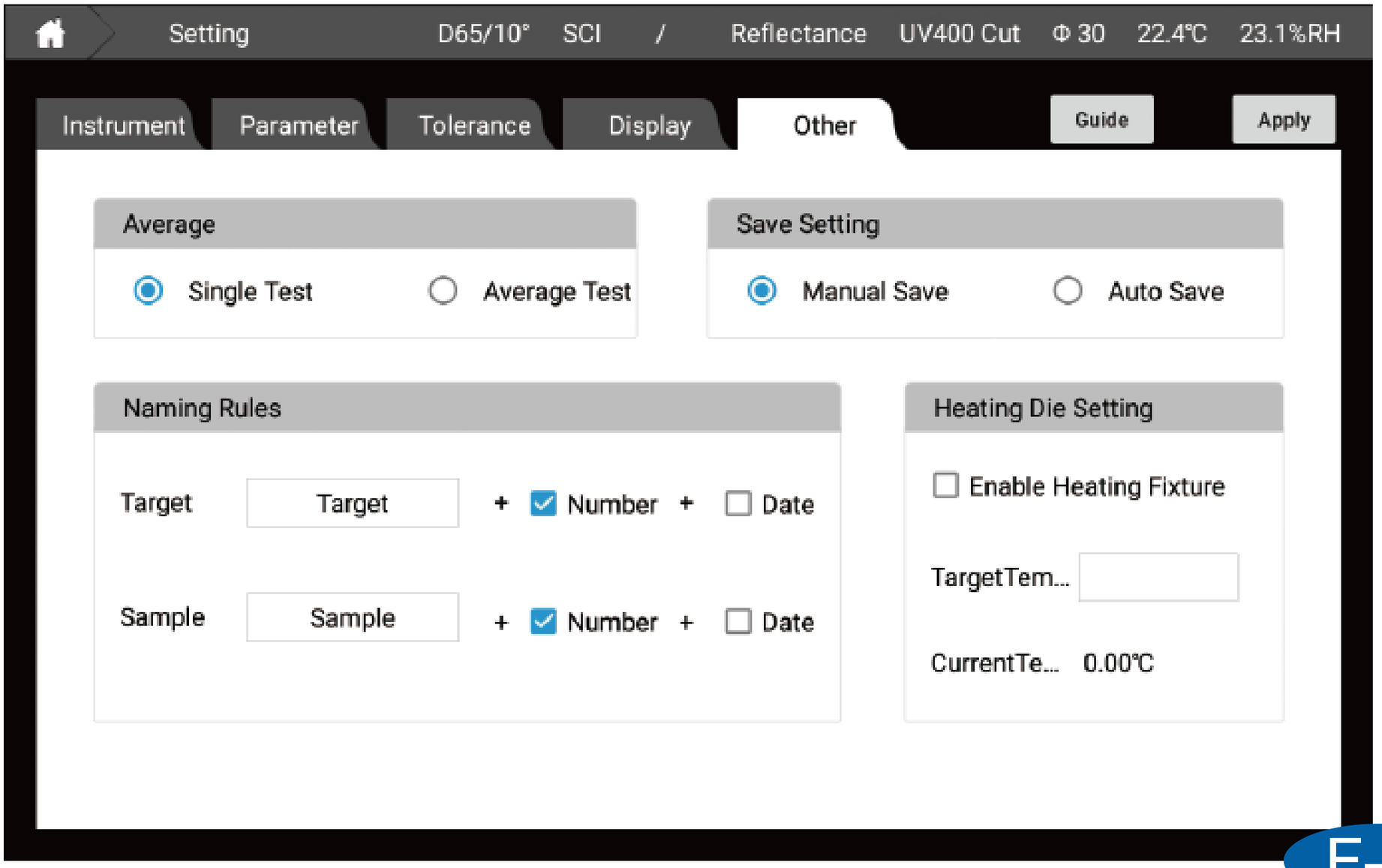
Setting
D65/10° SCI / Reflectance UV400 Cut Φ 30 22.4℃ 23.1%RH
Instrument
Parameter
Tolerance
Display
Other
Guide
Apply
Average
Single Test
Average Test
Save Setting
Manual Save
Auto Save
Naming Rules
Target
Target
+ Number + Date
Sample
Sample
+ Number + Date
Heating Die Setting
Enable Heating Fixture
TargetTem...
CurrentTe... 0.00℃

F–5

[Data View]

G

1.On the left of this page, it is the test data of target. On the right, it is the sample data under this target.
2.The bottom left of the page can search and sort the standards or samples according to the name, time or remarks.
3.After choose one of the target, we can see the sample test result under this target on the right.
4.Long press the standard or sample, we can set it into target, modify, delete the current selection, delete all, save to my color library and export report.
5.Click one of the target, user can see the sample information under this target. User can search sample,save and upload the data.
6.Click parameter edit,we can choose the parameter need show on data view interface.

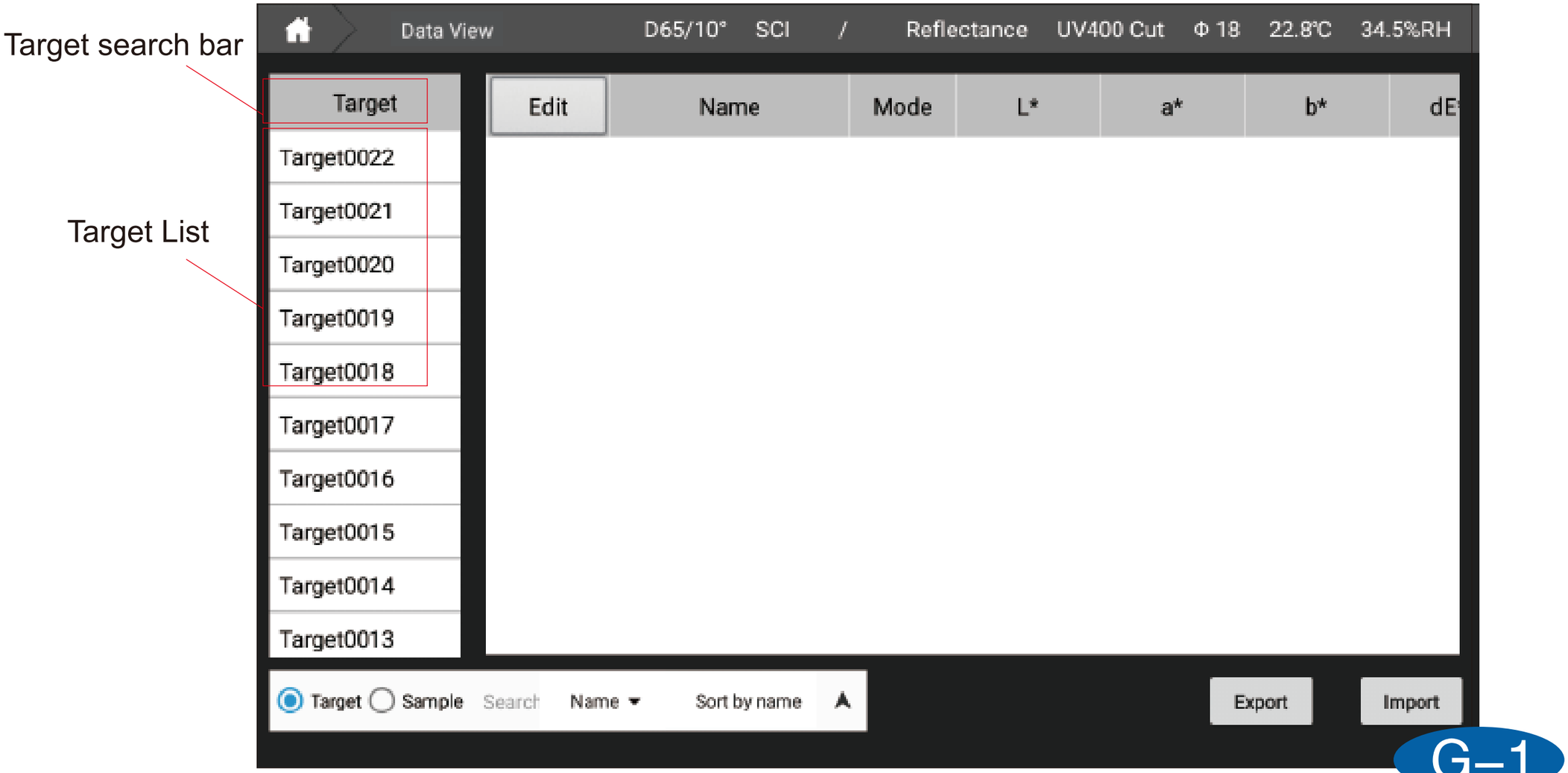
Target search bar
Target List
Data View
D65/10° SCI / Reflectance UV400 Cut Φ 18 22.8°C 34.5%RH
Target
Target0022
Target0021
Target0020
Target0019
Target0018
Target0017
Target0016
Target0015
Target0014
Target0013
Edit
Name
Mode
L*
a*
b*
dE
Target
Sample
Search
Name
Sort by name
Export
Import
G–1

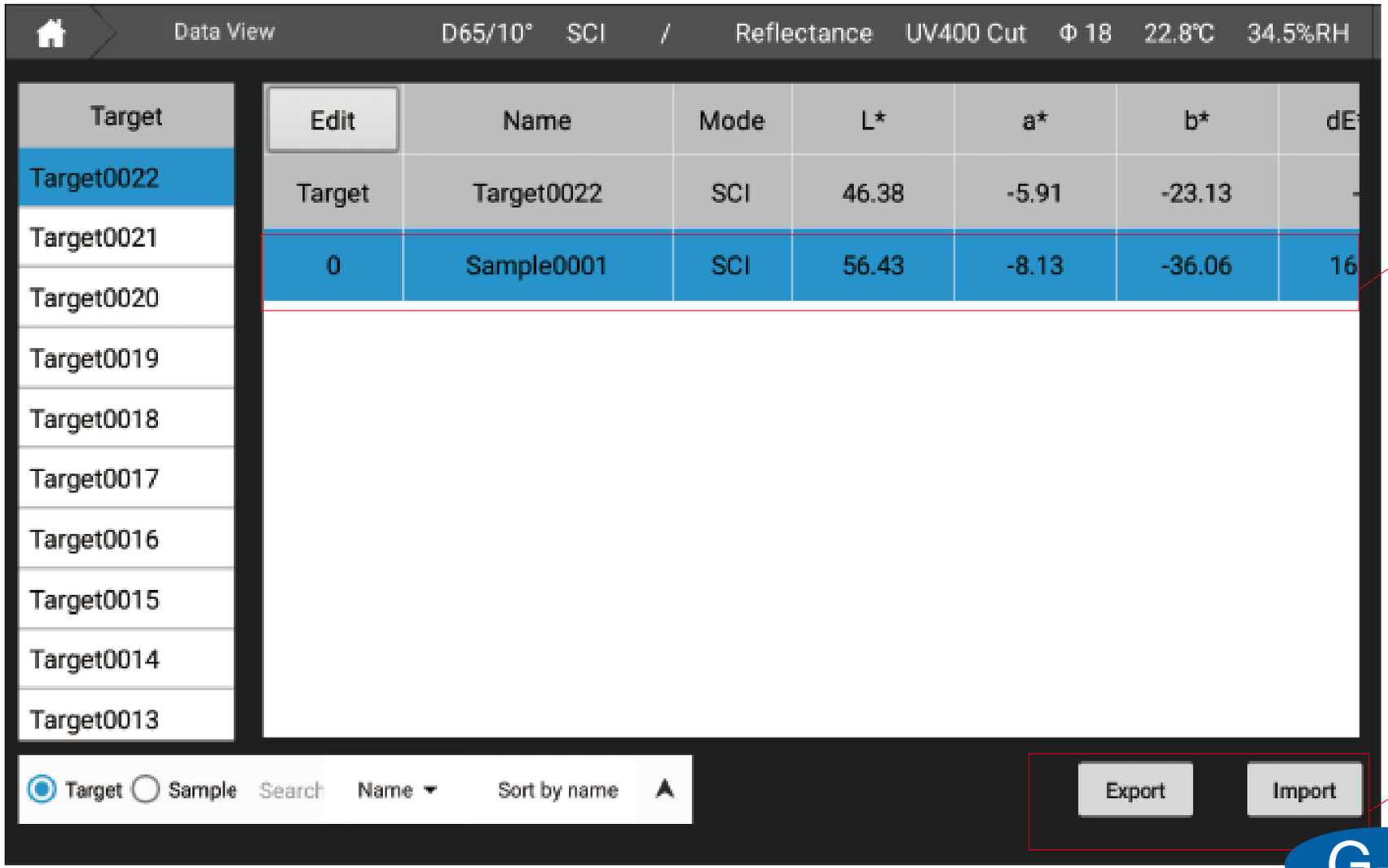
Data View
D65/10° SCI / Reflectance UV400 Cut Φ 18 22.8℃ 34.5%RH
Target
Target0022
Target0021
Target0020
Target0019
Target0018
Target0017
Target0016
Target0015
Target0014
Target0013
Edit
Name
Mode
L*
a*
b*
dE
Target
Target0022
SCI
46.38
-5.91
-23.13
0
Sample0001
SCI
56.43
-8.13
-36.06
16
Target
Sample
Search
Name
Sort by name
Export
Import
Sample List
Save and upload the current data
G–2

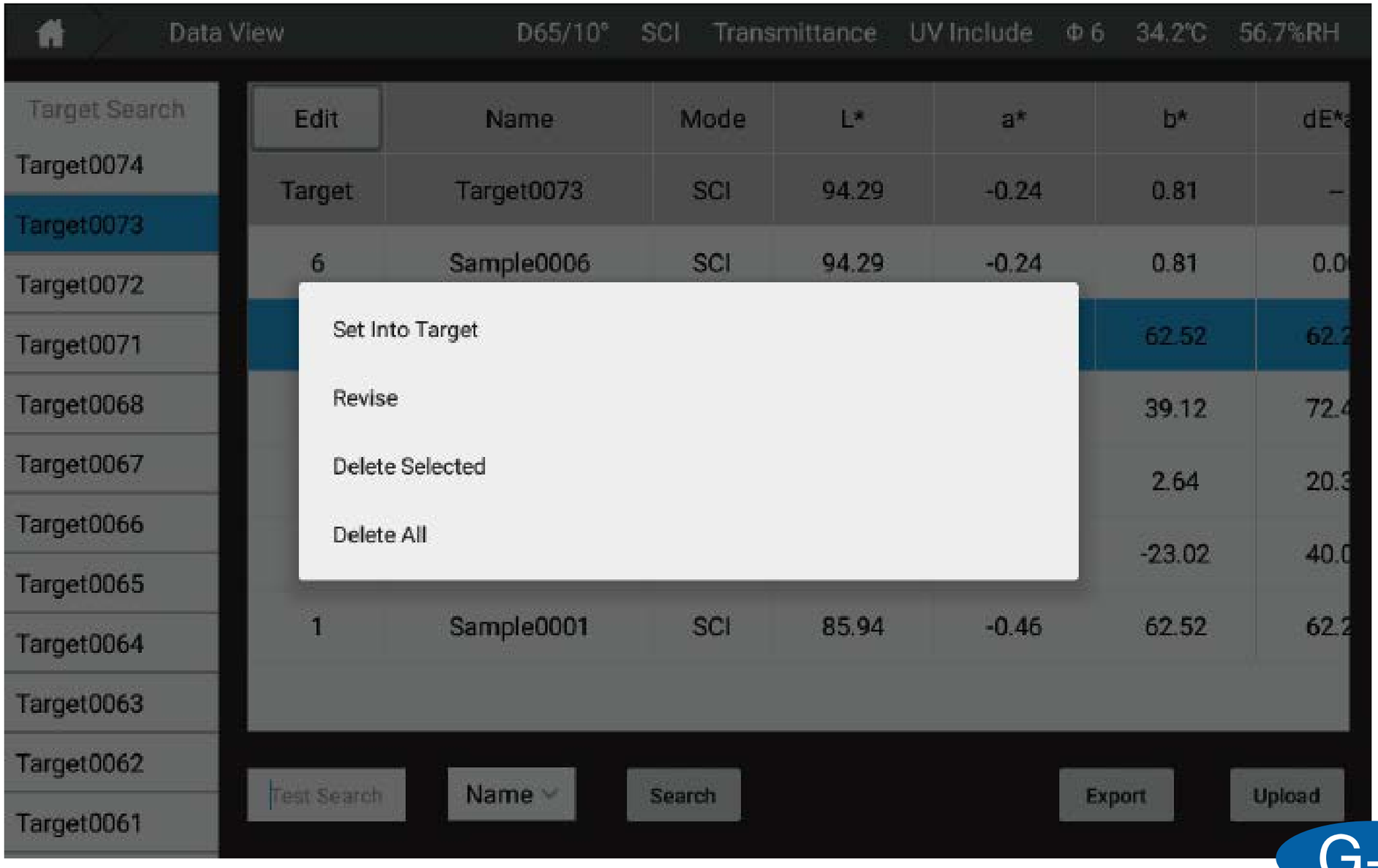
Data View
D65/10°
SCI
Transmittance
UV Include
Φ 6
34.2℃
56.7%RH
Target Search
Target0074
Target0073
Target0072
Target0071
Target0068
Target0067
Target0066
Target0065
Target0064
Target0063
Target0062
Target0061
Edit
Name
Mode
L*
a*
b*
dE*a
Target
Target0073
SCI
94.29
-0.24
0.81
6
Sample0006
SCI
94.29
-0.24
0.81
62.52
39.12
2.64
-23.02
1
Sample0001
SCI
85.94
-0.46
62.52
Set Into Target
Revise
Delete Selected
Delete All
Test Search
Name
Search
Export
Upload

G–3

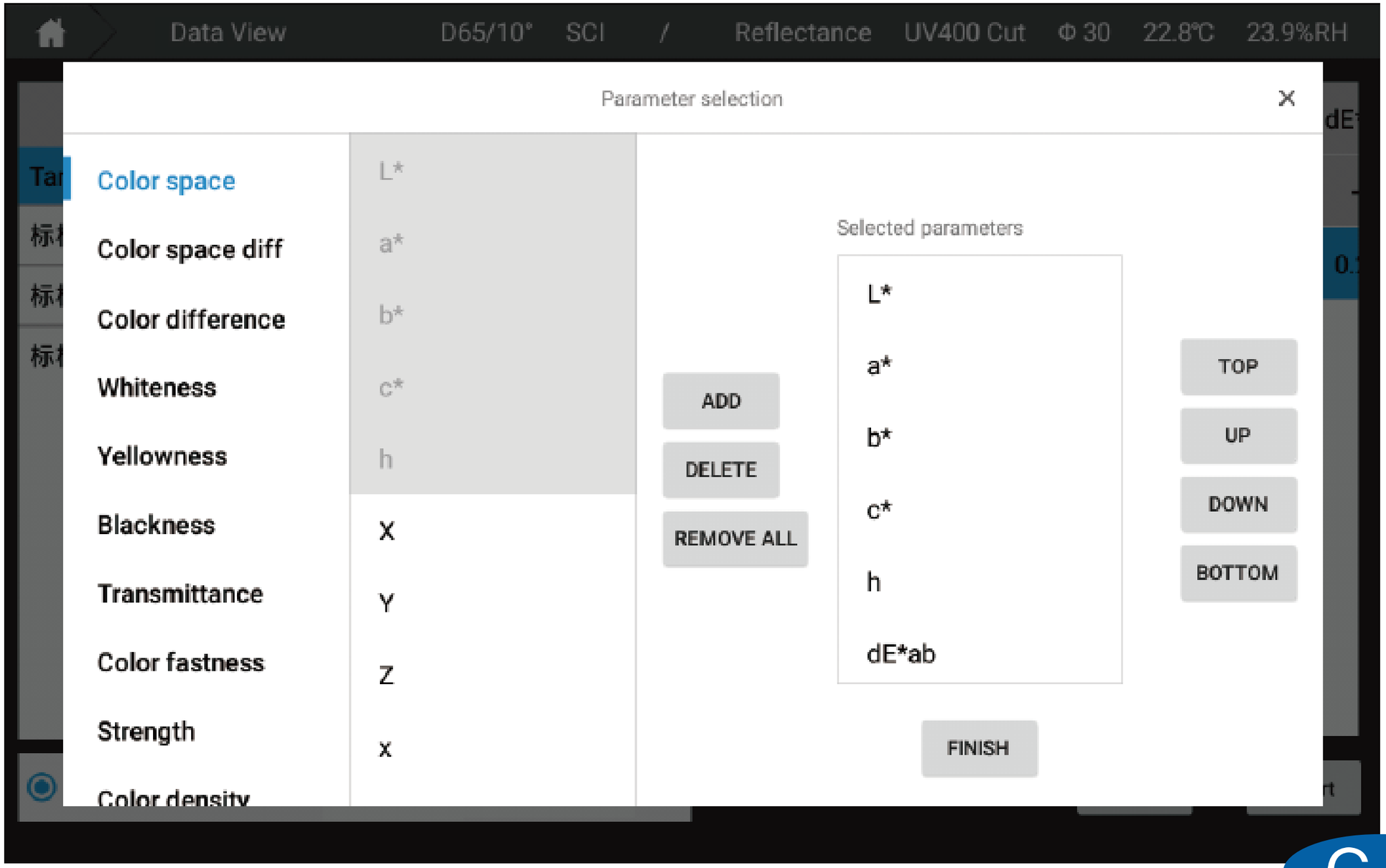
Data View
D65/10°
SCI
/
Reflectance
UV400 Cut
Φ 30
22.8℃
23.9%RH
Parameter selection
Color space
Color space diff
Color difference
Whiteness
Yellowness
Blackness
Transmittance
Color fastness
Strength
Color density
L*
a*
b*
c*
h
X
Y
Z
x
ADD
DELETE
REMOVE ALL
Selected parameters
L*
a*
b*
c*
h
dE*ab
TOP
UP
DOWN
BOTTOM
FINISH

G–4

[My Color]

H

From my color, user can see all the saved data. The data can be set into target or used for finding similar color.
Top of the page: User can select and modify my color library,user can drop down to select different libraries, or click
“Manage” to rename, delete, etc. the color library, or click “Add New” to add a color library;
Middle of the page: the data display under the currently selected color library (L*, a*, b* data is Calculated based on D65/10°);
At the bottom of the page: User can perform data search, display, back-up (requires the insertion of a U disk), add a new data to the current color library, synchronize data to the cloud, delete data, etc.

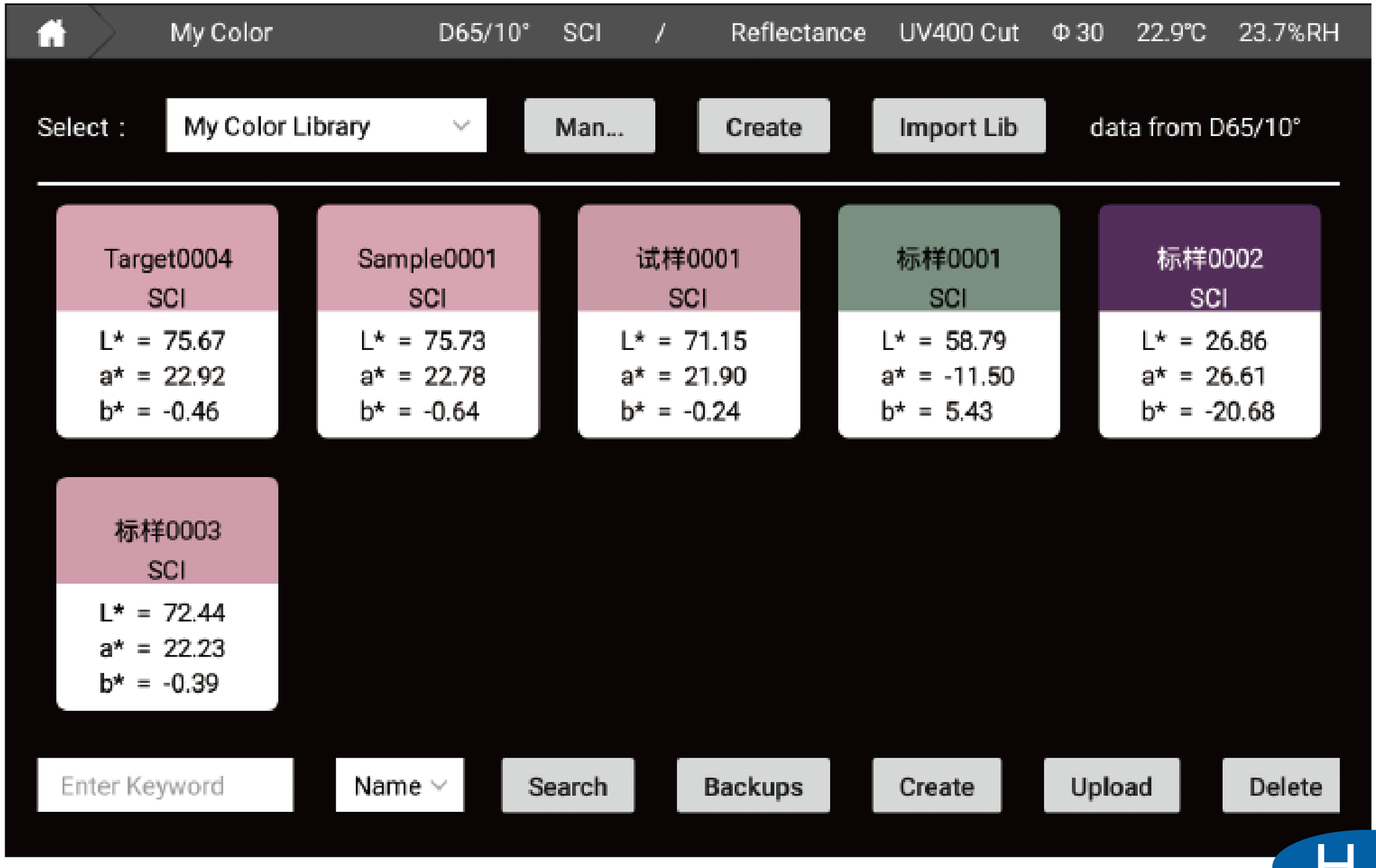
My Color
D65/10°
SCI
/
Reflectance
UV400 Cut
Φ 30
22.9℃
23.7%RH
Select :
My Color Library
Man...
Create
Import Lib
data from D65/10°
Target0004
SCI
L* = 75.67
a* = 22.92
b* = -0.46
Sample0001
SCI
L* = 75.73
a* = 22.78
b* = -0.64
试样0001
SCI
L* = 71.15
a* = 21.90
b* = -0.24
标样0001
SCI
L* = 58.79
a* = -11.50
b* = 5.43
标样0002
SCI
L* = 26.86
a* = 26.61
b* = -20.68
标样0003
SCI
L* = 72.44
a* = 22.23
b* = -0.39
Enter Keyword
Name
Search
Backups
Create
Upload
Delete

H–1

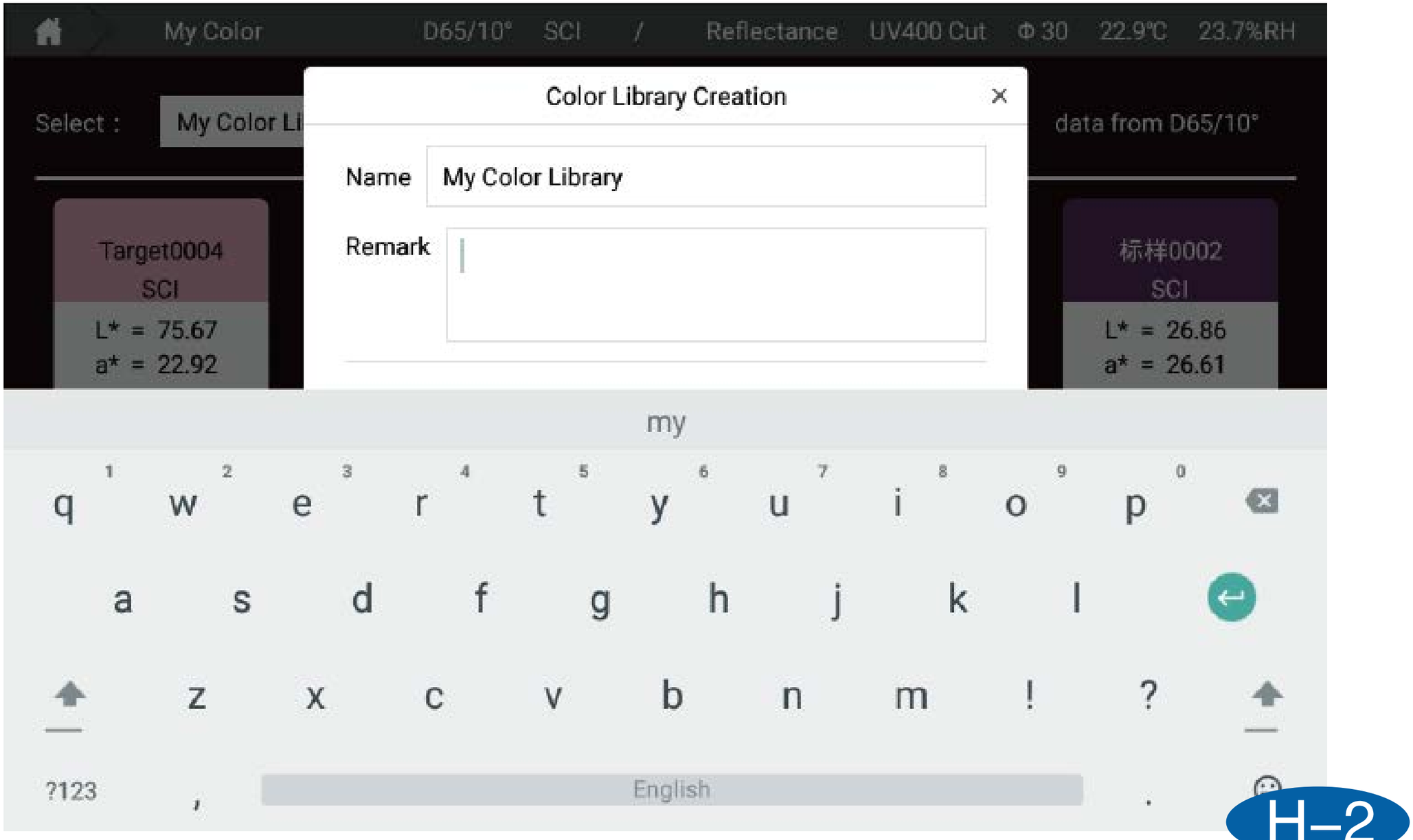
My Color
D65/10°
SCI
/
Reflectance
UV400 Cut
Φ 30
22.9℃
23.7%RH
Select :
My Color Li
Color Library Creation
Name
My Color Library
Remark
data from D65/10°
Target0004
SCI
L* = 75.67
a* = 22.92
标样0002
SCI
L* = 26.86
a* = 26.61
my
q w e r t y u i o p
a s d f g h j k l
z x c v b n m ! ?
?123
English
H–2

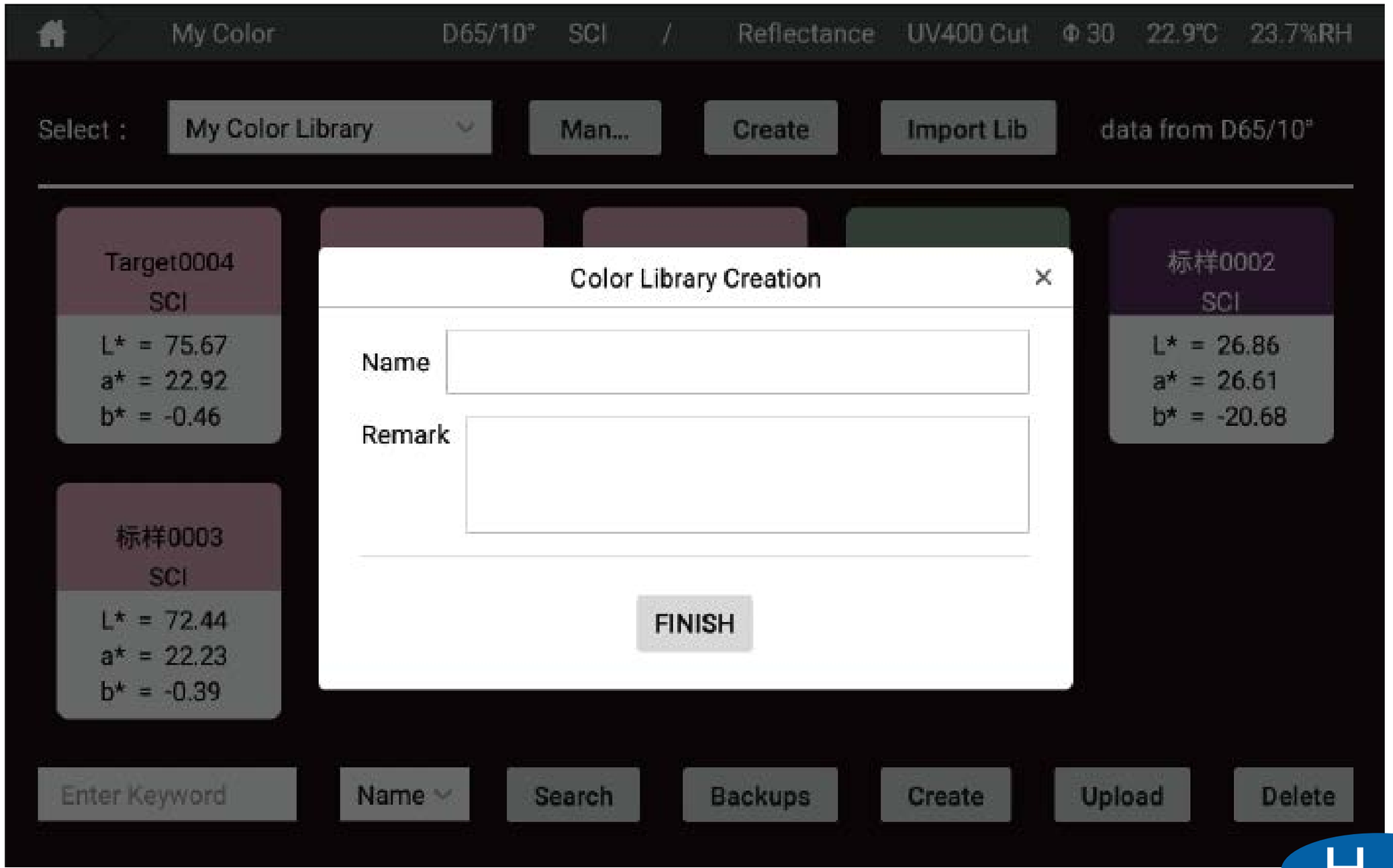
My Color
D65/10°
SCI
/
Reflectance
UV400 Cut
Φ 30
22.9°C
23.7%RH
Select：
My Color Library
Man...
Create
Import Lib
data from D65/10°
Target0004
SCI
L* = 75.67
a* = 22.92
b* = -0.46
标样0003
SCI
L* = 72.44
a* = 22.23
b* = -0.39
Color Library Creation
Name
Remark
FINISH
标样0002
SCI
L* = 26.86
a* = 26.61
b* = -20.68
Enter Keyword
Name
Search
Backups
Create
Upload
Delete

H–3

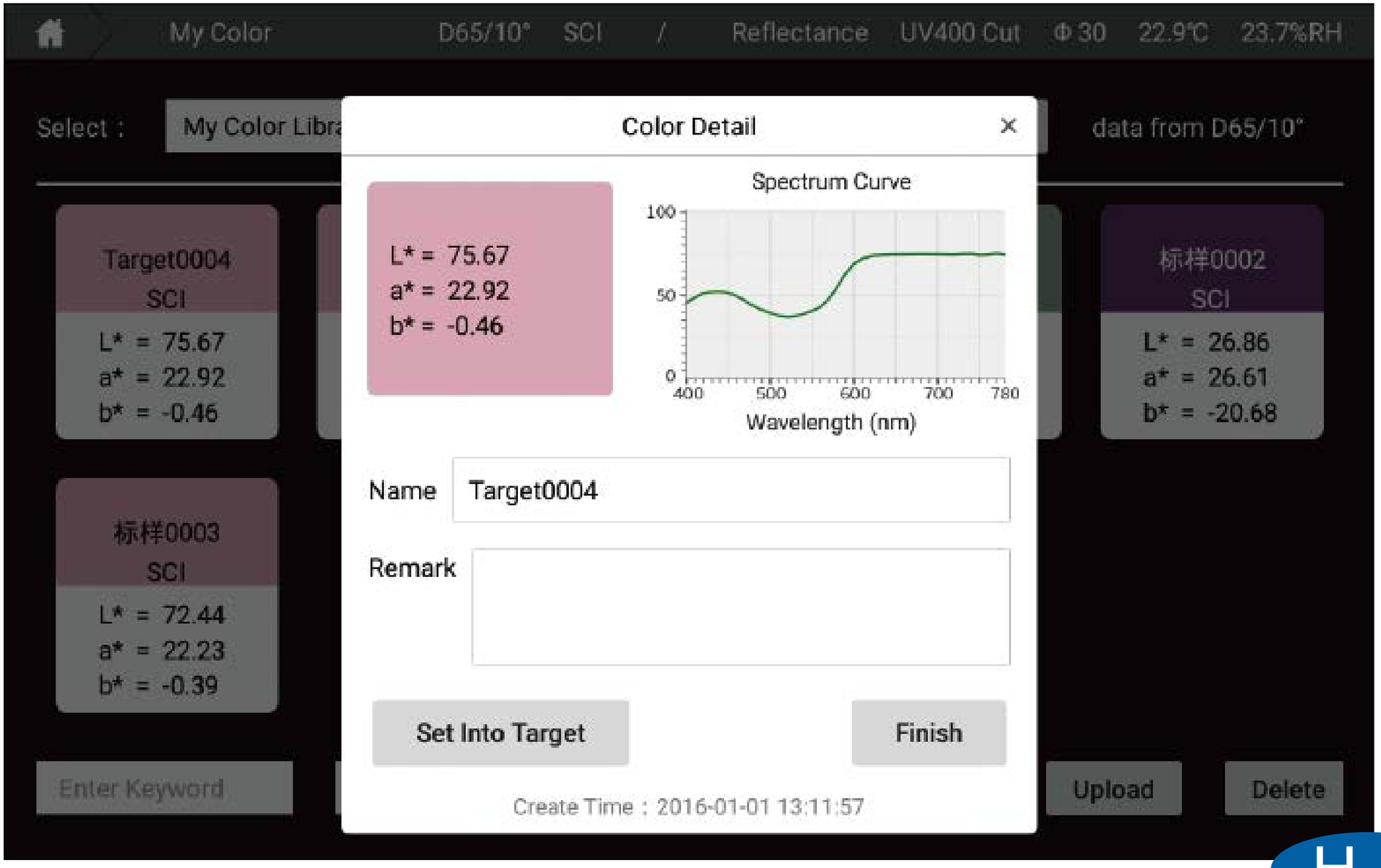
My Color
D65/10° SCI / Reflectance UV400 Cut Φ30 22.9℃ 23.7%RH
Select :
My Color Libra
data from D65/10°
Target0004
SCI
L* = 75.67
a* = 22.92
b* = -0.46
标样0003
SCI
L* = 72.44
a* = 22.23
b* = -0.39
标样0002
SCI
L* = 26.86
a* = 26.61
b* = -20.68
Enter Keyword
Upload
Delete
Color Detail
L* = 75.67
a* = 22.92
b* = -0.46
Spectrum Curve
100
50
0
400
500
600
700
780
Wavelength (nm)
Name
Target0004
Remark
Set Into Target
Finish
Create Time : 2016-01-01 13:11:57

H–4

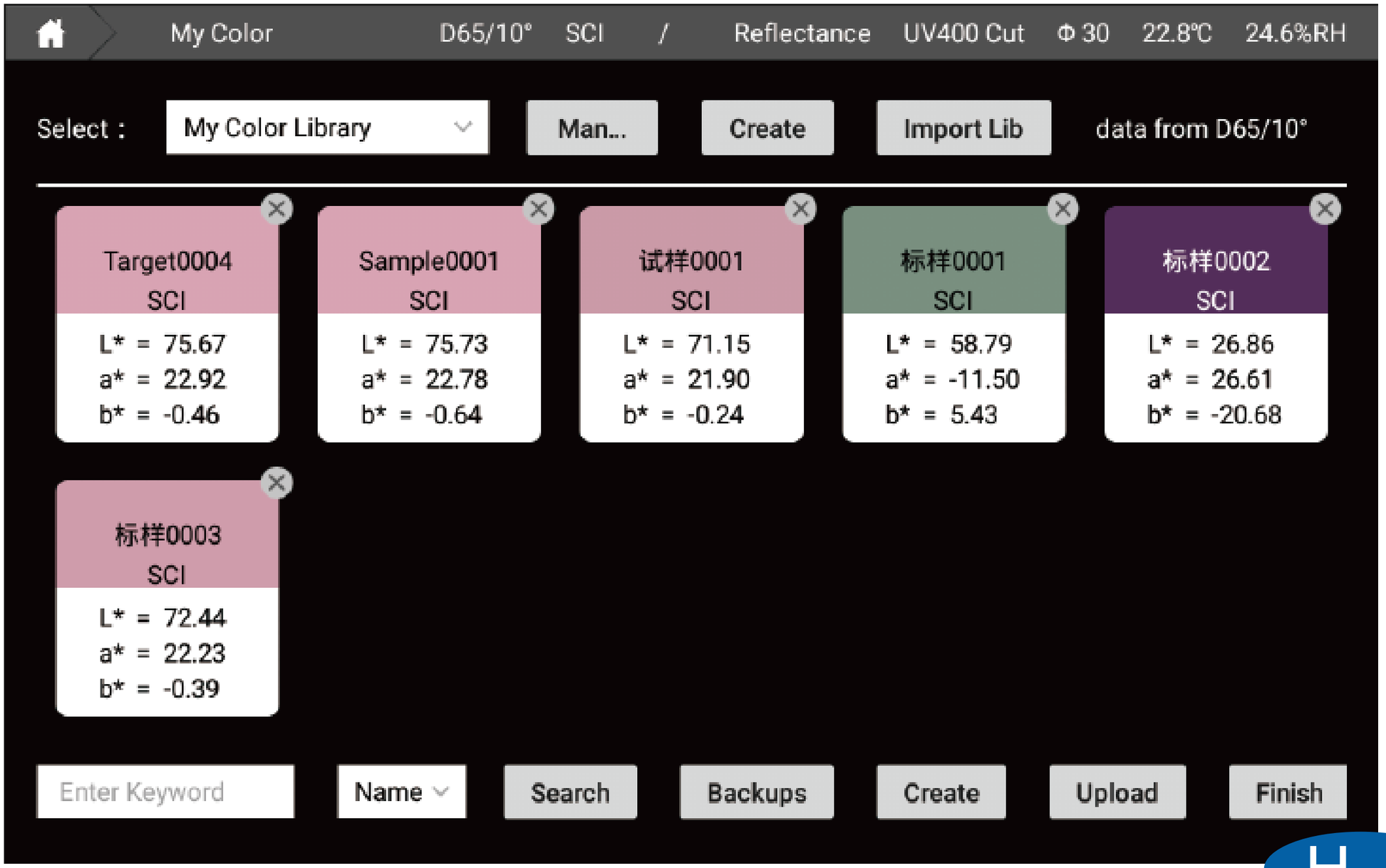
My Color
D65/10°
SCI
/
Reflectance
UV400 Cut
Φ 30
22.8℃
24.6%RH
Select：
My Color Library
Man...
Create
Import Lib
data from D65/10°
Target0004
SCI
L* = 75.67
a* = 22.92
b* = -0.46
Sample0001
SCI
L* = 75.73
a* = 22.78
b* = -0.64
试样0001
SCI
L* = 71.15
a* = 21.90
b* = -0.24
标样0001
SCI
L* = 58.79
a* = -11.50
b* = 5.43
标样0002
SCI
L* = 26.86
a* = 26.61
b* = -20.68
标样0003
SCI
L* = 72.44
a* = 22.23
b* = -0.39
Enter Keyword
Name
Search
Backups
Create
Upload
Finish

H–5

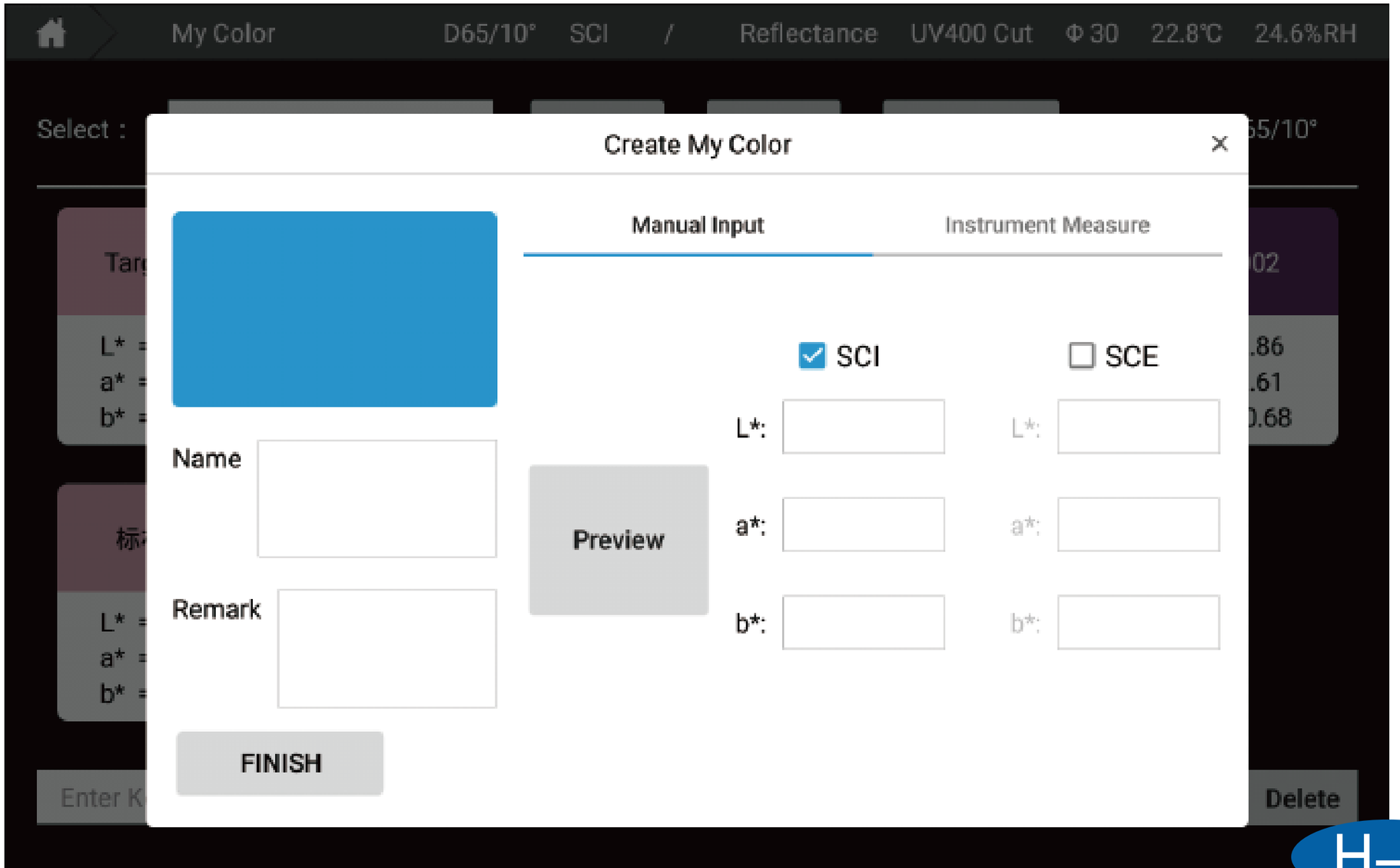
My Color
D65/10°
SCI
/
Reflectance
UV400 Cut
Φ 30
22.8℃
24.6%RH
Select :
Create My Color
Manual Input
Instrument Measure
SCI
SCE
L*:
a*:
b*:
Name
Remark
Preview
FINISH
Delete
H–6

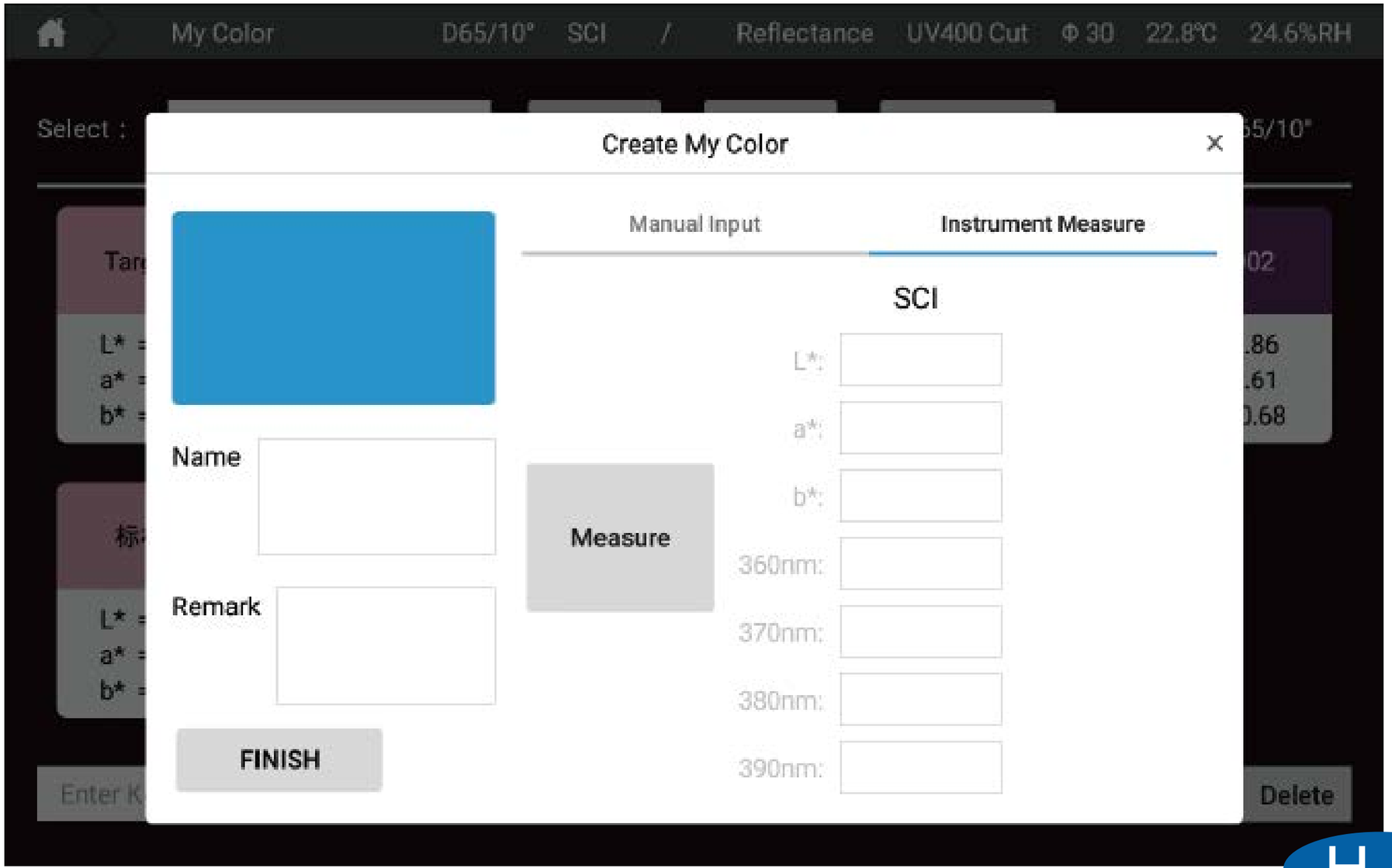
My Color
D65/10°
SCI
/
Reflectance
UV400 Cut
Φ 30
22.8℃
24.6%RH
Select :
Create My Color
Manual Input
Instrument Measure
SCI
L*:
a*:
b*:
360nm:
370nm:
380nm:
390nm:
Name
Remark
Measure
FINISH
Delete

H–7

[Individual Center]

I–1

User can revise the account password and cancel the current account.

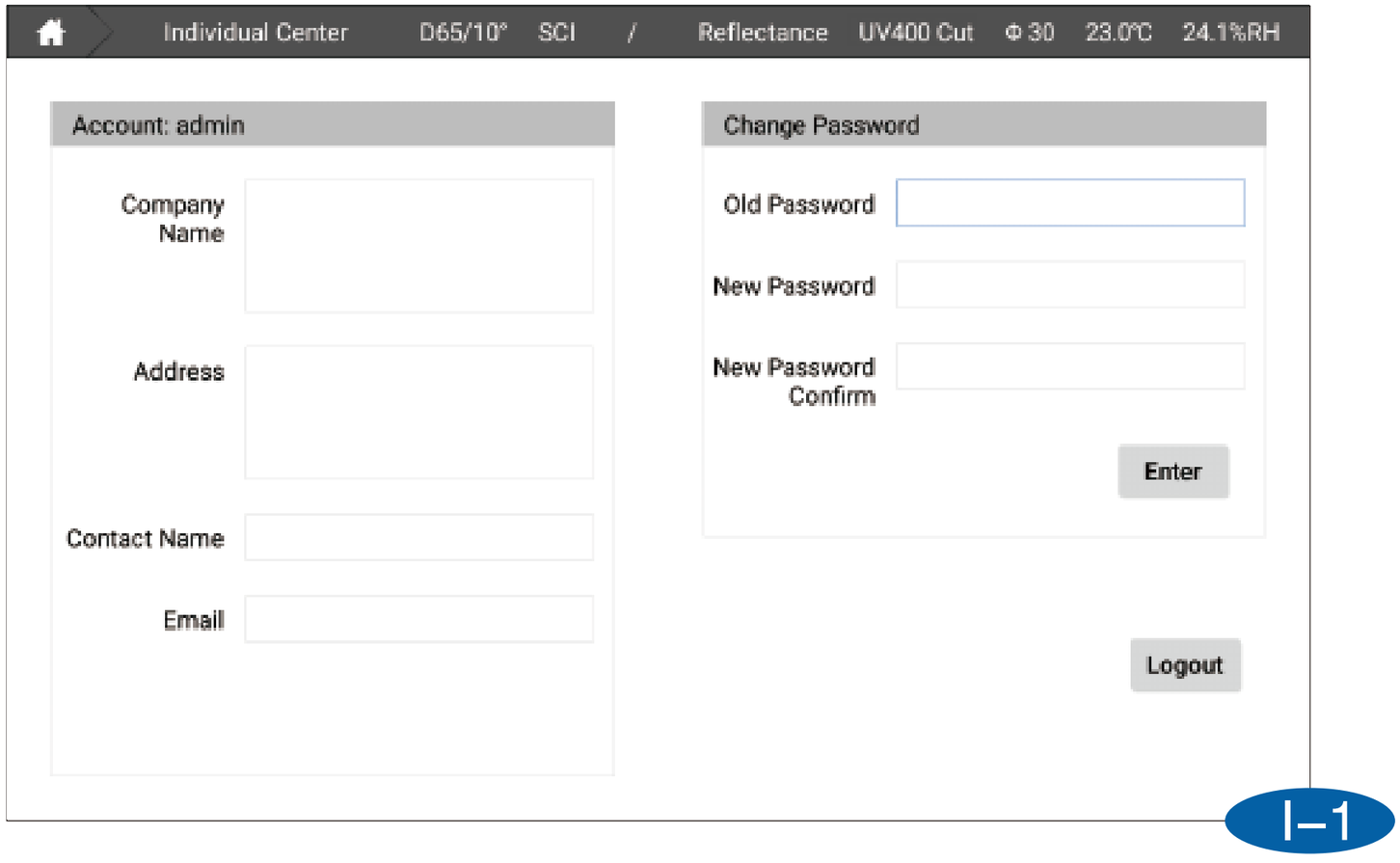

[About]

J–1

User can check instrument information such as software version, instrument version,serial number,model,etc.

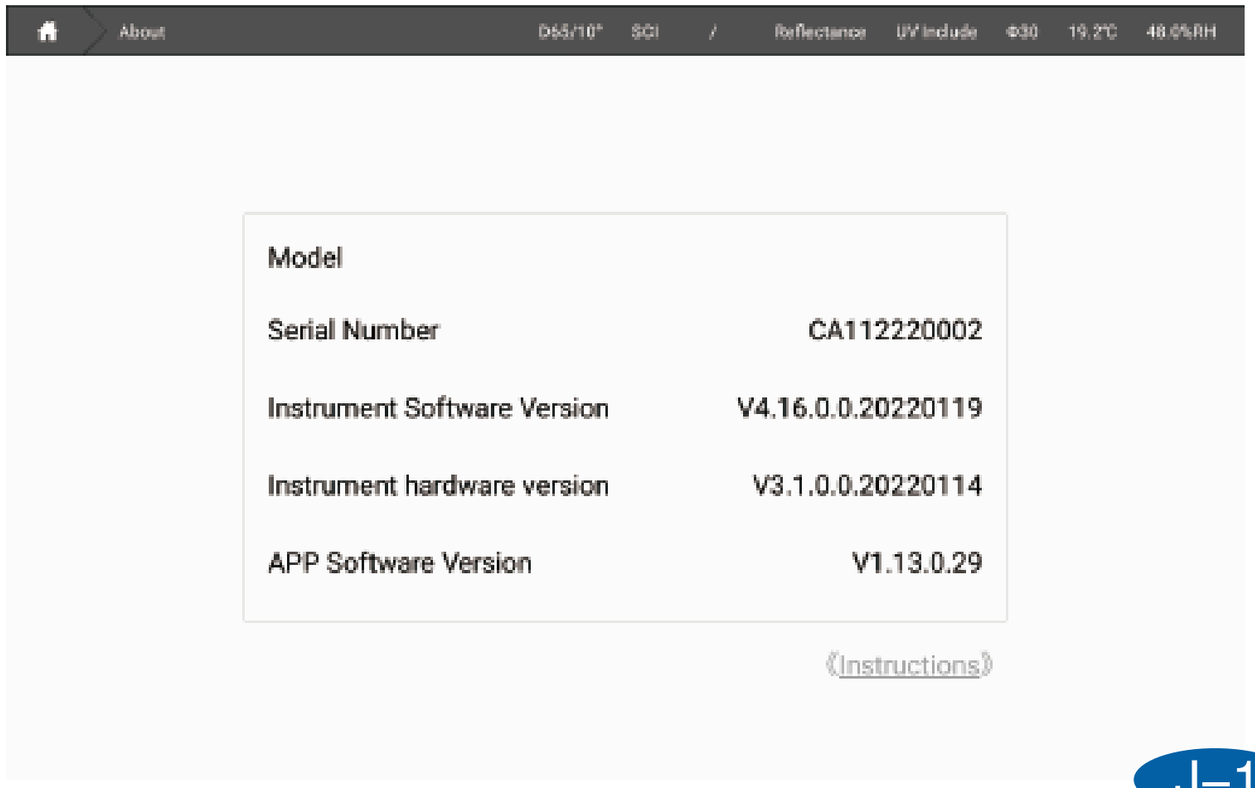

J–1

[Daily Record]

K–1

User can see the instrument informatin of login, calibration, error,etc.

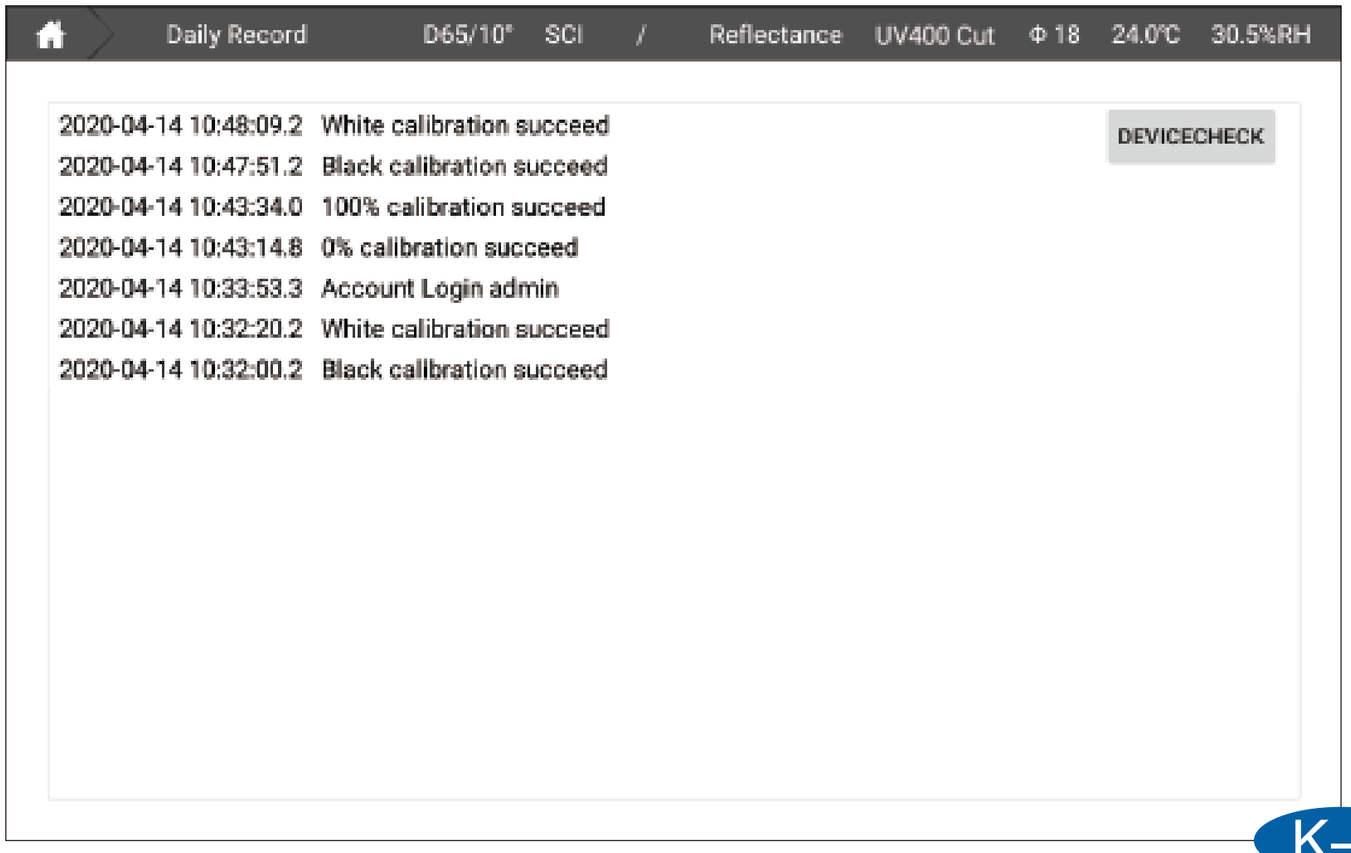

[Update]

L–1

Connect with internet, click update to update the instrument software into the latest.

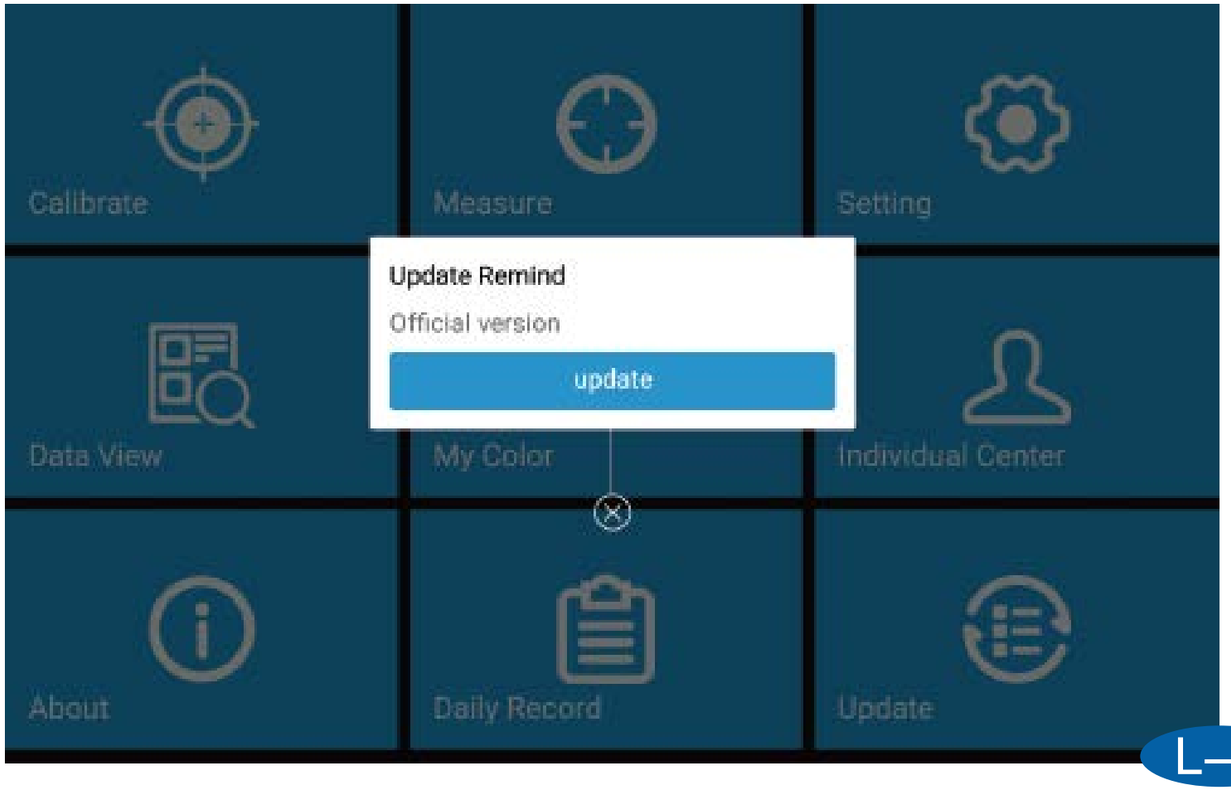

L–1

Measure Interface Introduction

[Color Difference]

M-1

CIELABCH

Under this interface, user can get sample L*, a*, b*, c*, h values, color difference value dL*, da*, db*, dc*, dH*, and dE*ab comparing with the target and check if the sample is qualified or not according to the tolerance.

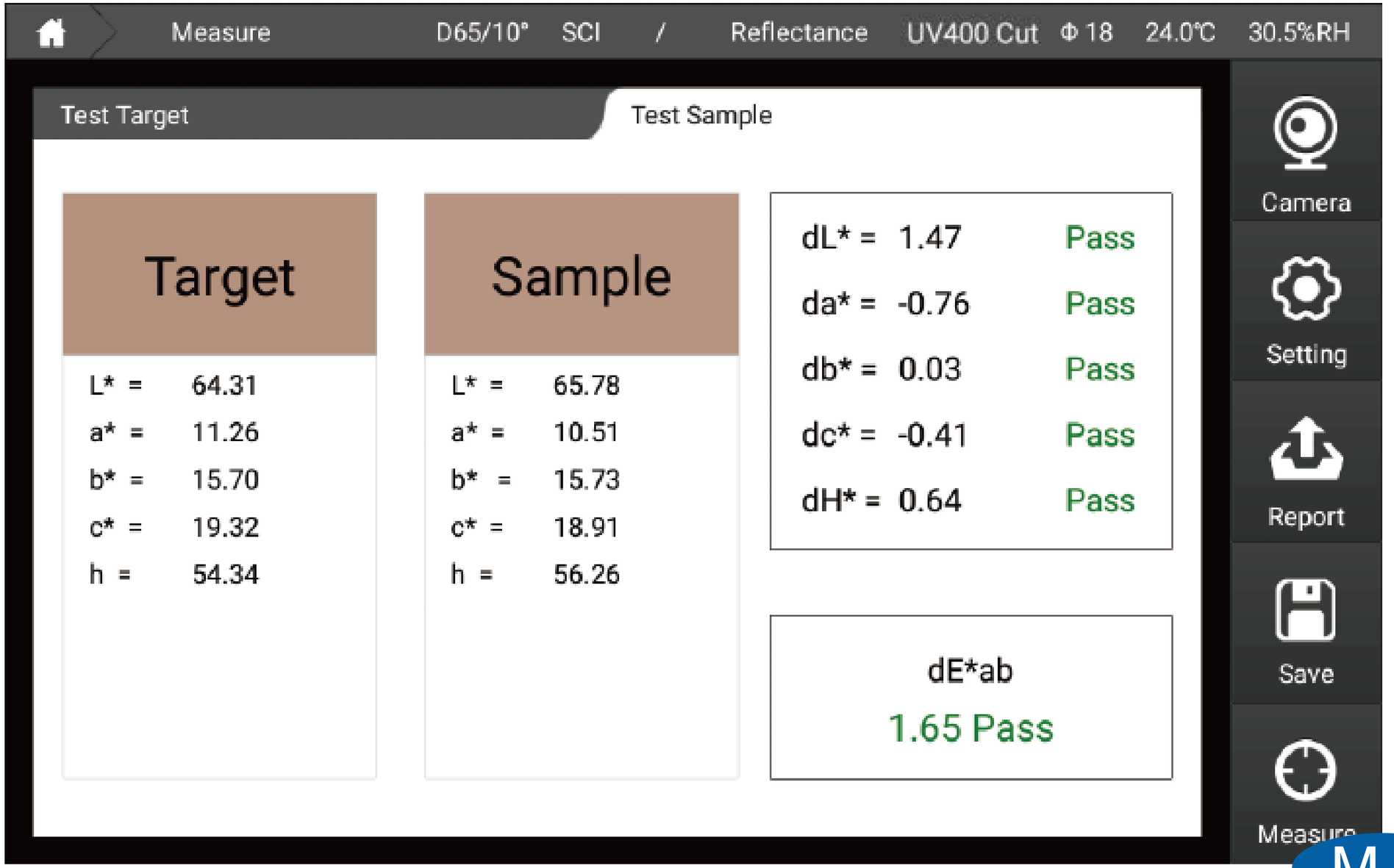
Measure
D65/10°
SCI
/
Reflectance
UV400 Cut
Φ 18
24.0℃
30.5%RH
Test Target
Test Sample
Target
L* = 64.31
a* = 11.26
b* = 15.70
c* = 19.32
h = 54.34
Sample
L* = 65.78
a* = 10.51
b* = 15.73
c* = 18.91
h = 56.26
dL* = 1.47 Pass
da* = -0.76 Pass
db* = 0.03 Pass
dc* = -0.41 Pass
dH* = 0.64 Pass
dE*ab
1.65 Pass
Camera
Setting
Report
Save
Measure

M–1

M–2

CIEDE2000

Under this interface, user can get sample L*, a*, b*, c*, h values, color difference value dL', dC', dH' and dE*2000 comparing with the target and check if the sample is qualified or not according to the tolerance.

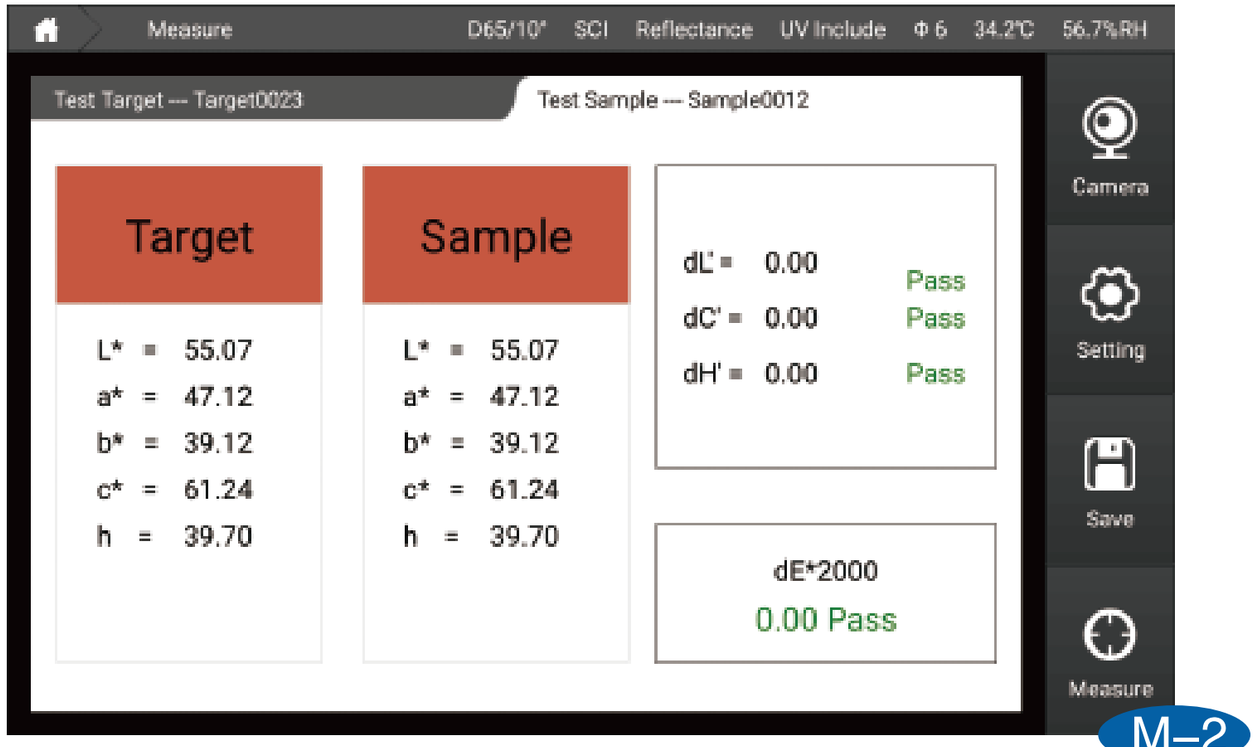

M–3

CIE94

Under this interface, user can get sample L*, a*, b*, c*, h values, color difference value dL*, da*, dc*,dH* and dE*94 comparing with the target and check if the sample is qualified or not according to the tolerance.

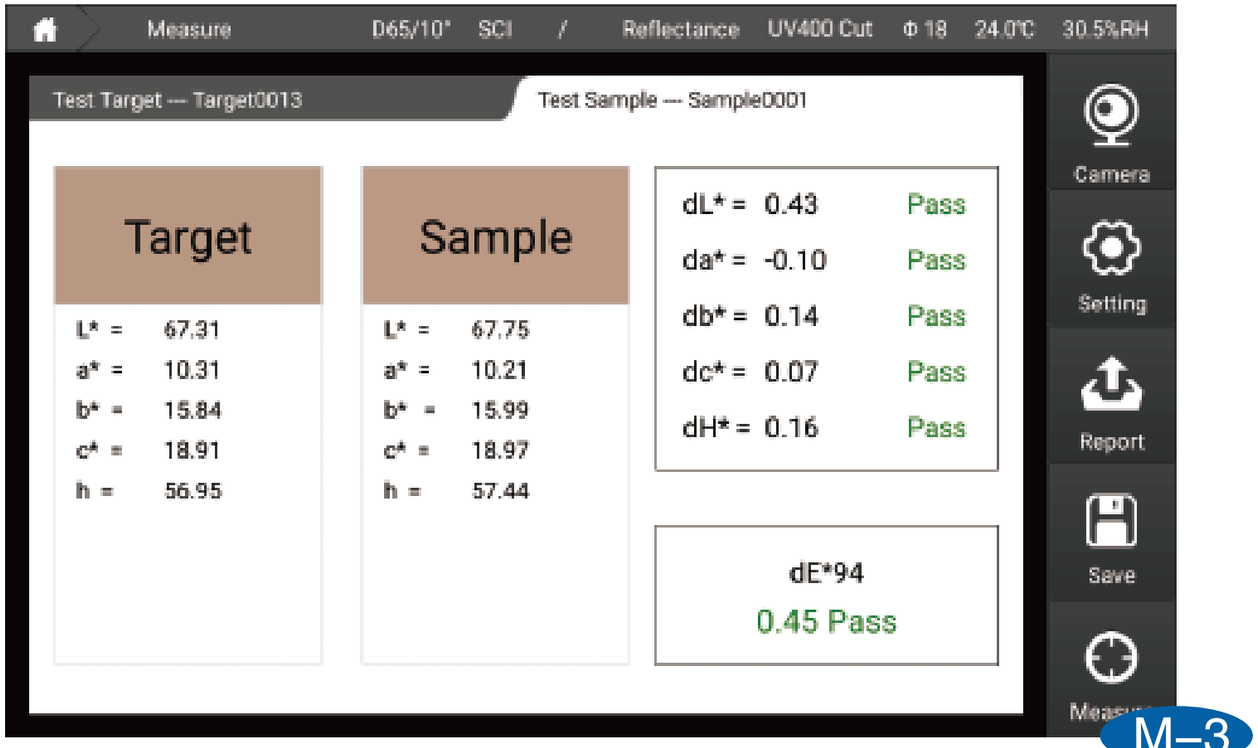

M–4

CMC

Under this interface, user can get sample L*, a*, b*, c*, h values, color difference value dL*, da*, dc*,dH* and dE cmc (l:c) comparing with the target and check if the sample is qualified or not according to the tolerance.

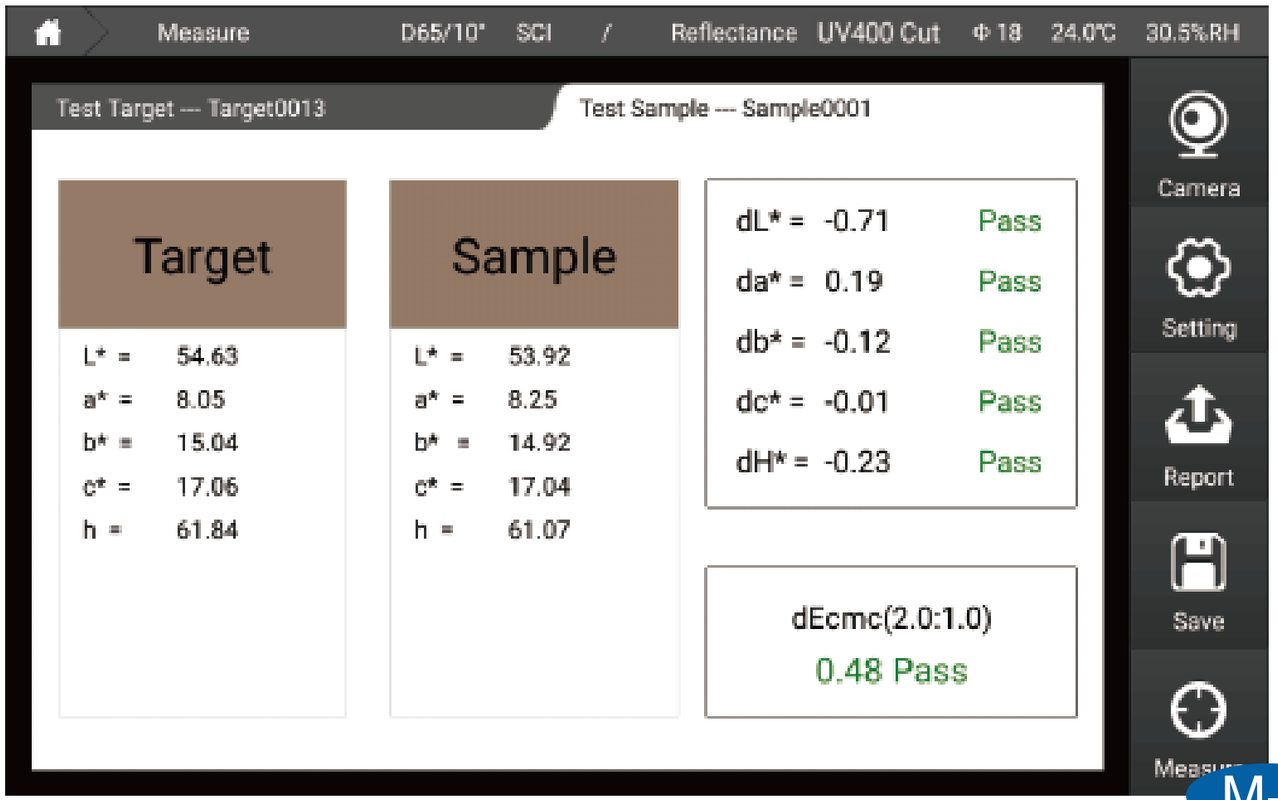

M–5

Hunter Lab

Under this interface, user can get sample Hunter L, Hunter a, Hunter b values, color difference value dHunter L, dHunter a, dHunter b and dE ab comparing with the target and check if the sample is qualified or not according to the tolerance.

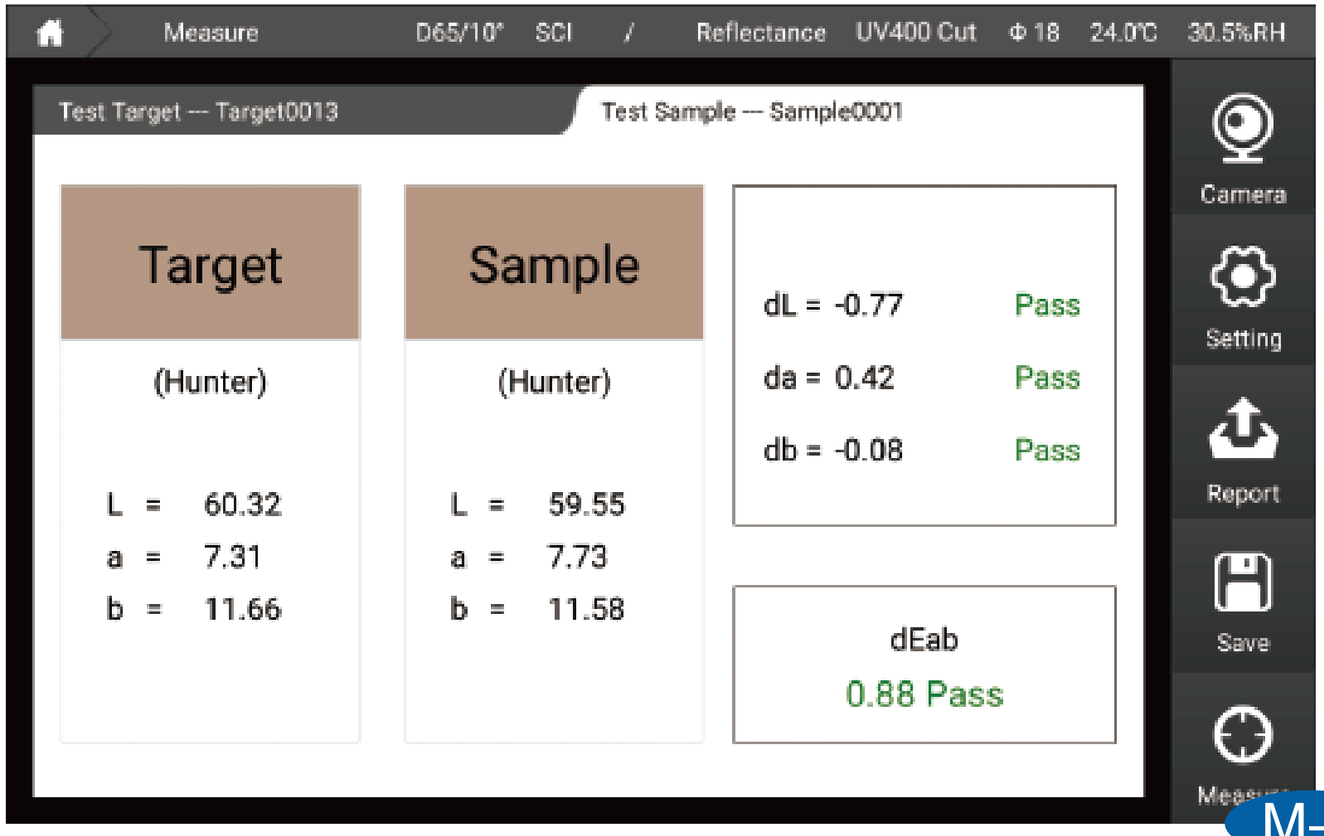

M–6

[Data]

N–1

1. Click parameter edit, we can edit the parameter.
2. Measure the target, then measure the sample to check the color difference.

Click the data, we can choose it to edit its name, delete, etc.

3.Click the data, we can choose it to edit its name, delete, etc.



N–1

[Figure]

O–1

CIELAB

Under this interface, user can measure sample L*, a*, b* values, sample position in the color space and color lab value will show.

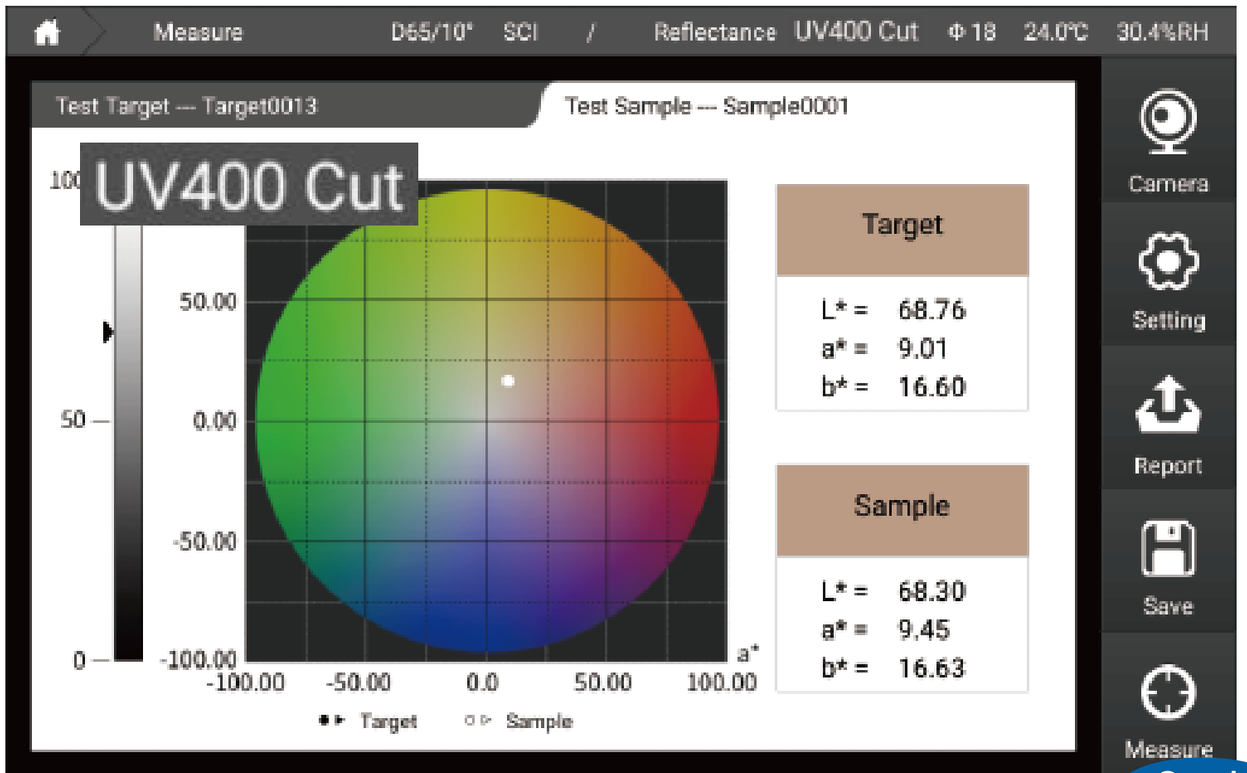

0–1

O–2

Yxy

Under this interface, user can measure sample Y,x,y values, sample x,y value in the color space and Yxy value will show.

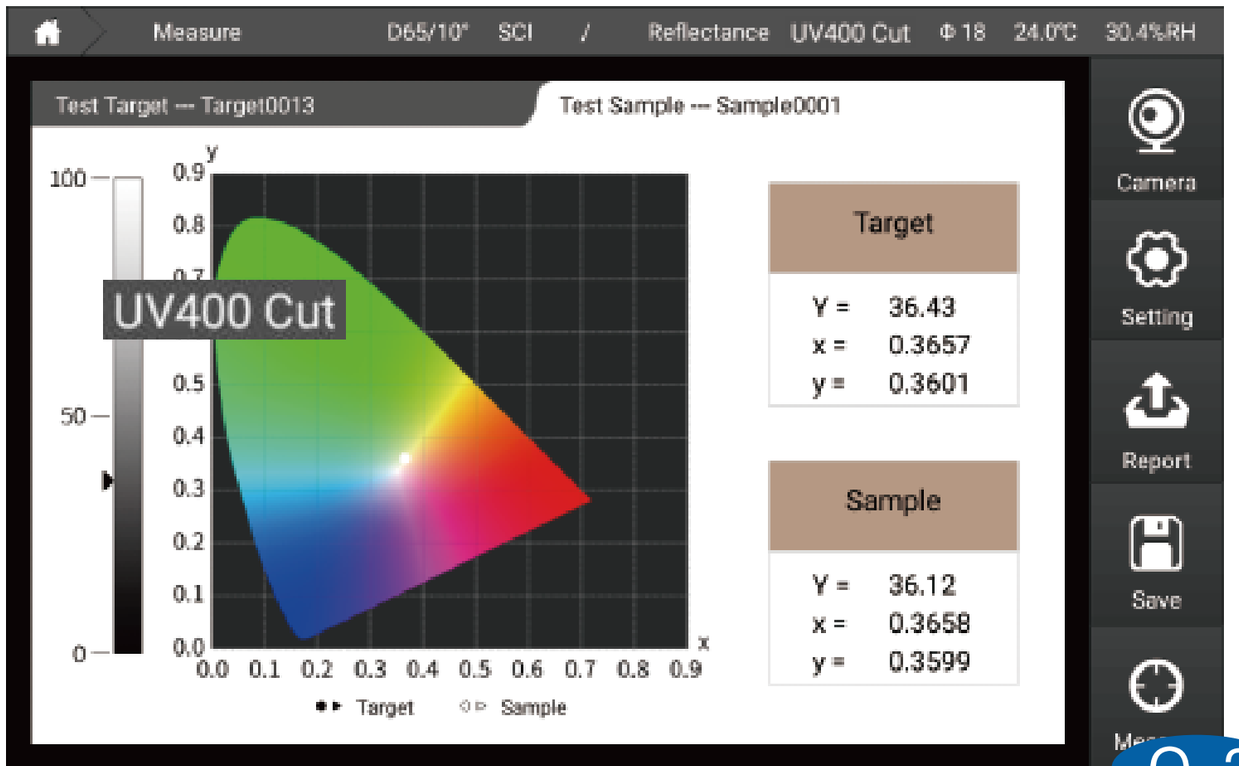

O–3

Luv

Under this interface, user can measure sample L*,u*,v* values, sample u',v' value in the color space and L*,u*,v* value will show.

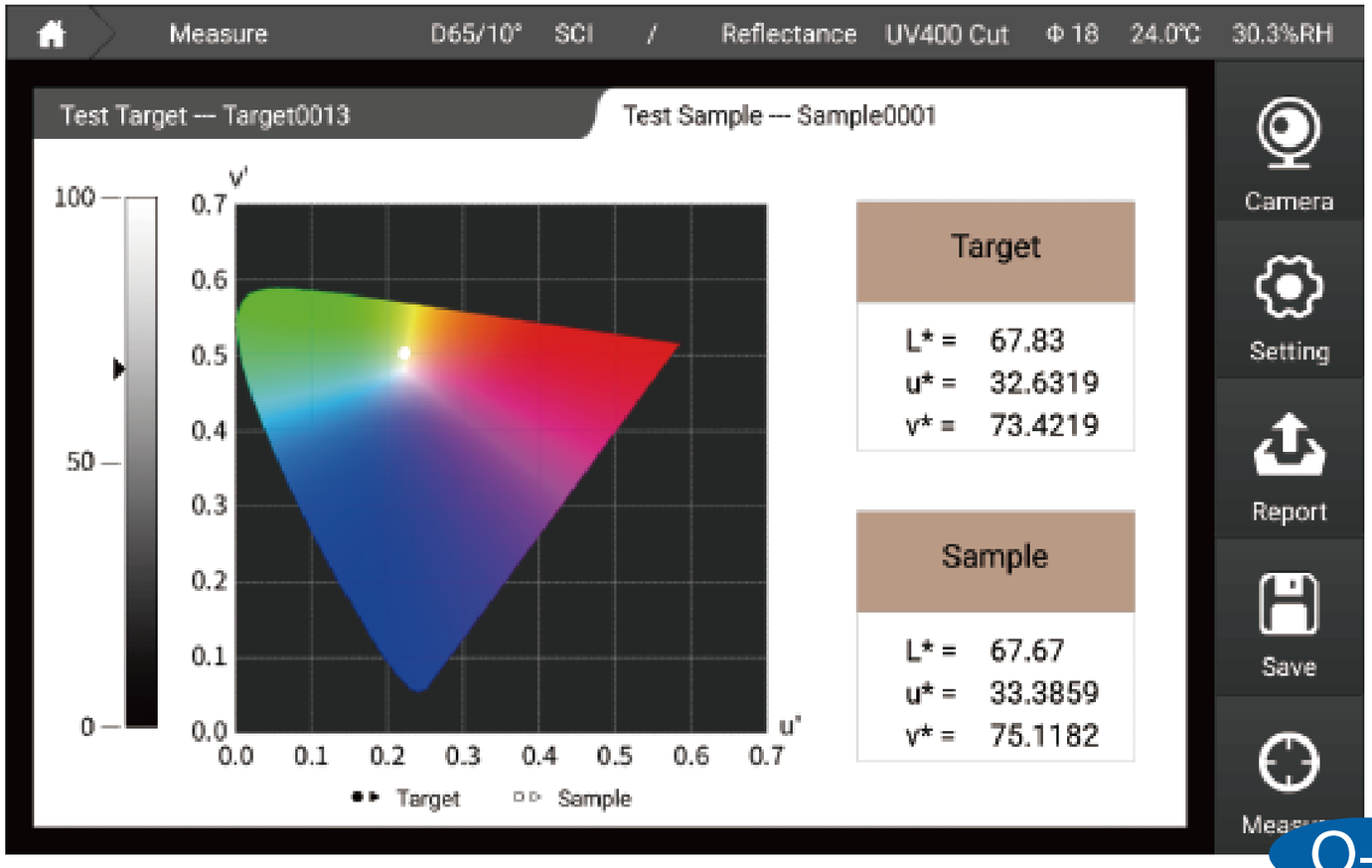

O–3

O–4

K/S Curve

User can measure and get sample K/S value and K/S curve under 360-780nm wavelength.

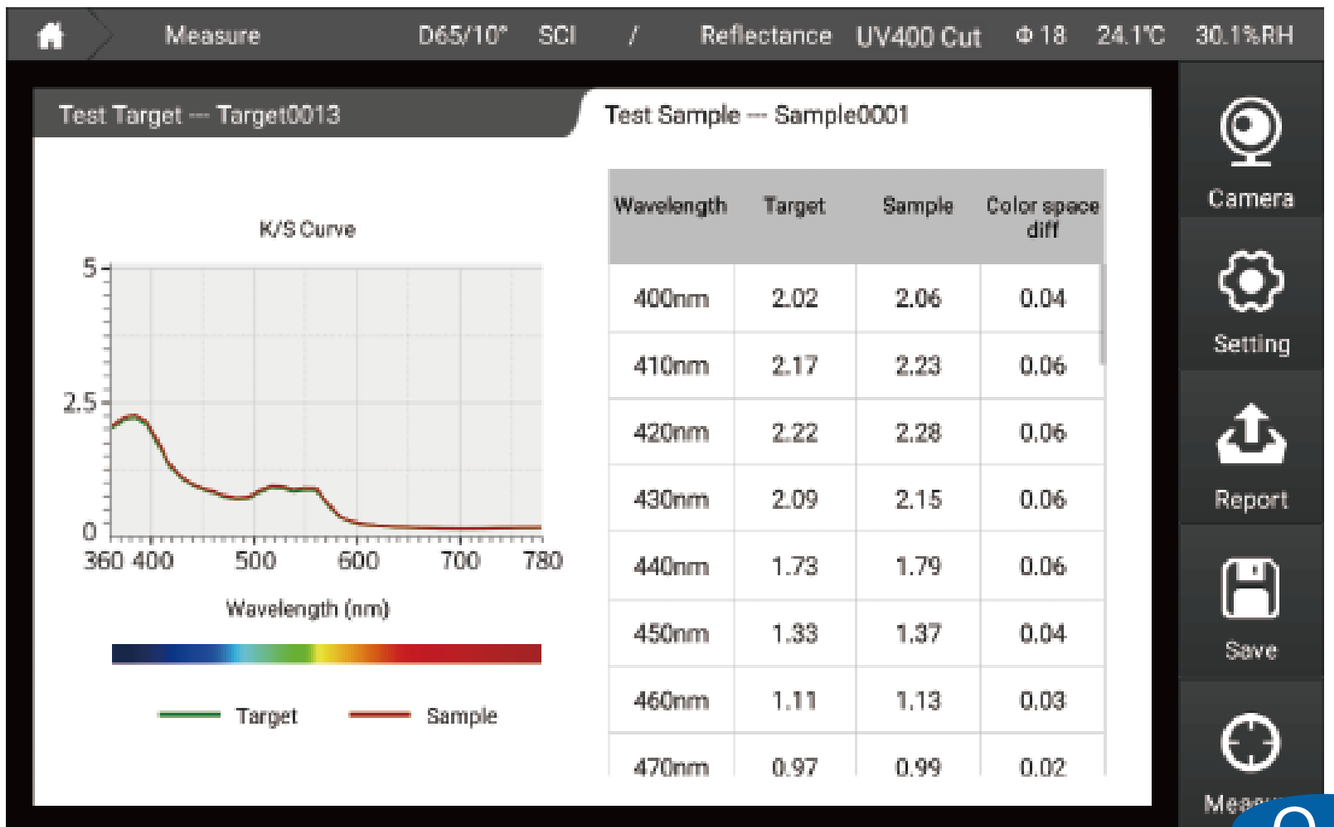

O–5

Reflectance Curve

User can measure and get sample reflectance value and curve under 360-780nm wavelength.

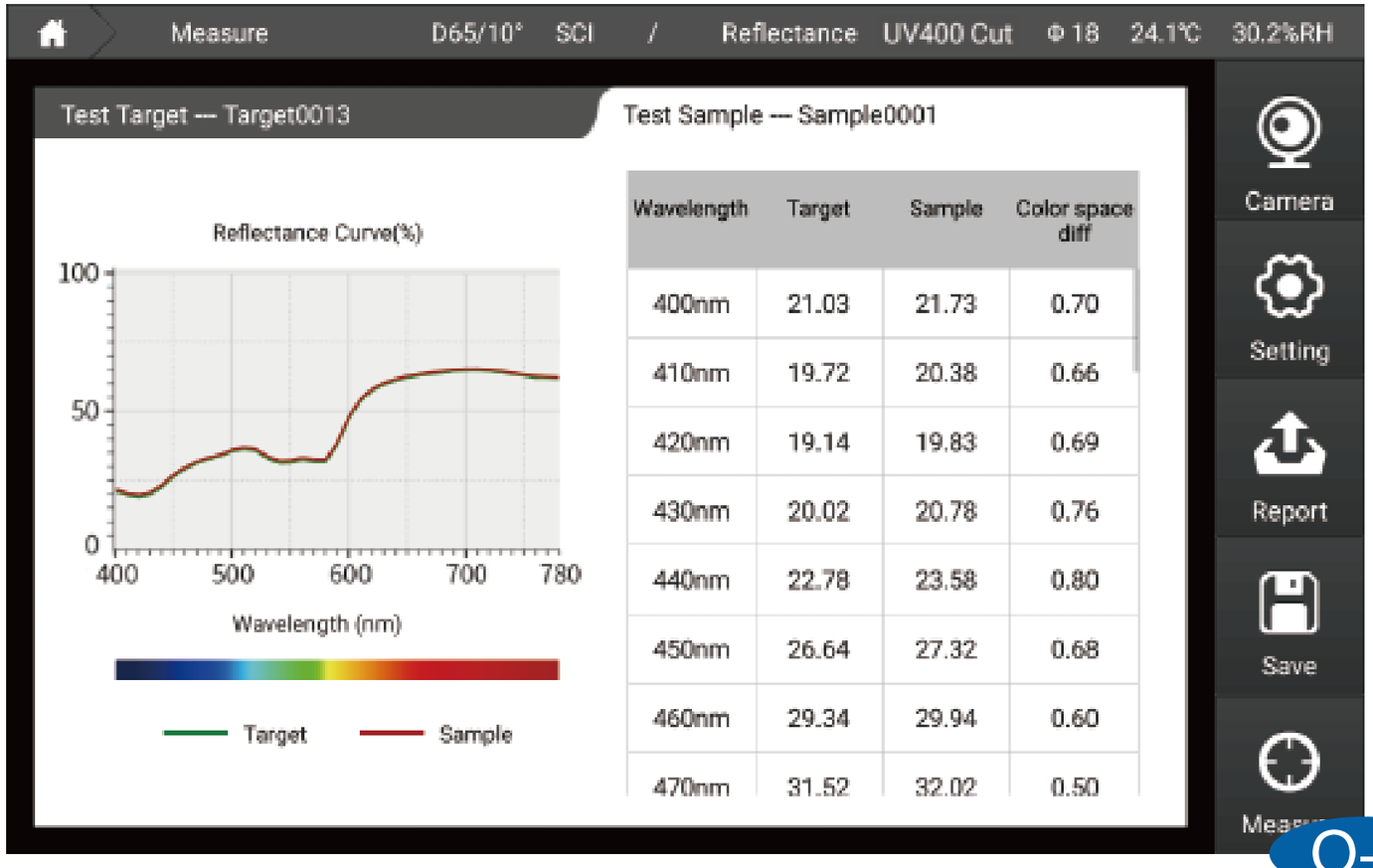

O–6

Transmittance Curve

User can measure and get sample transmittance value and curve under 360-780nm wavelength.

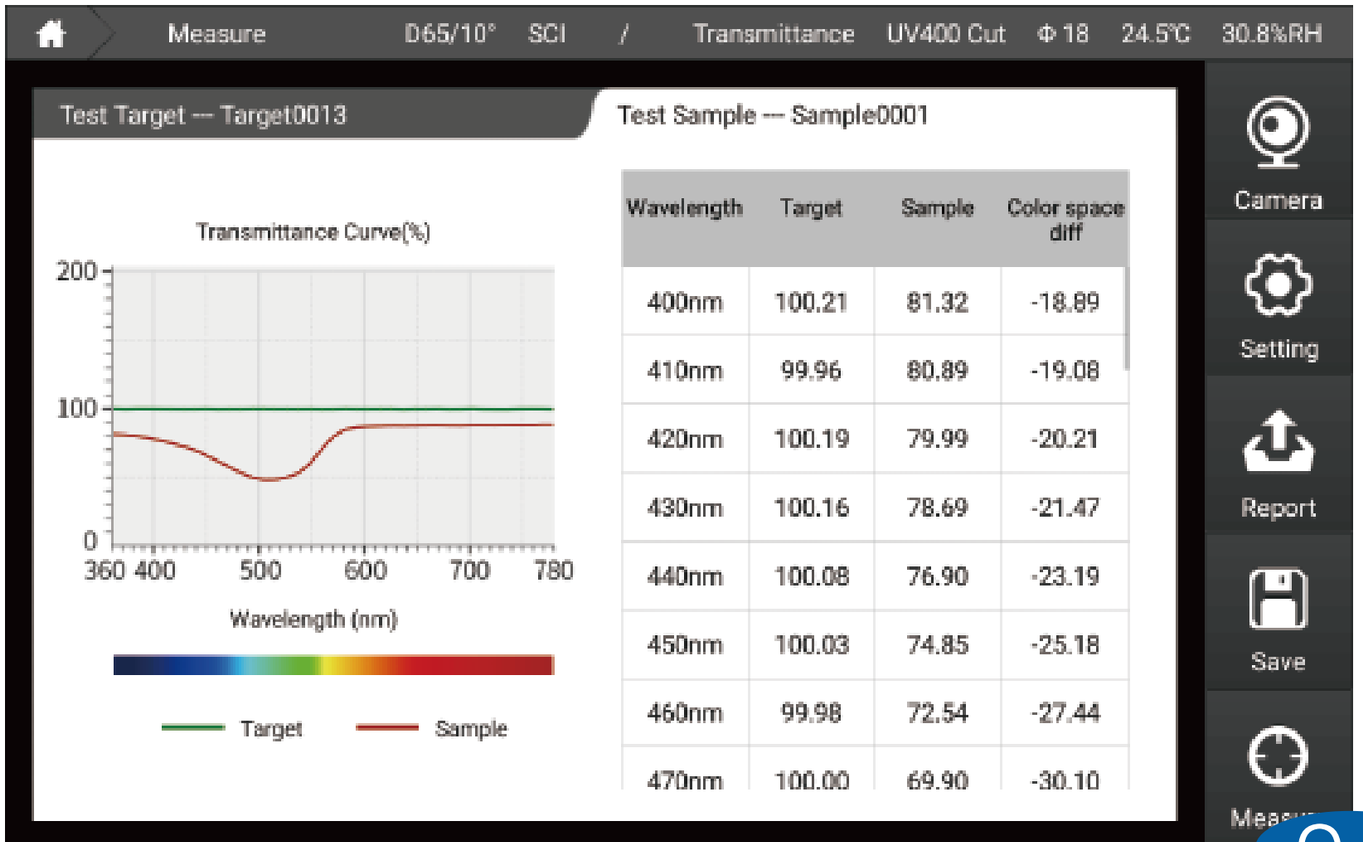

O–6

0–7

Absorbance Curve

User can measure and get sample absorbance value and curve under 360-780nm wavelength.

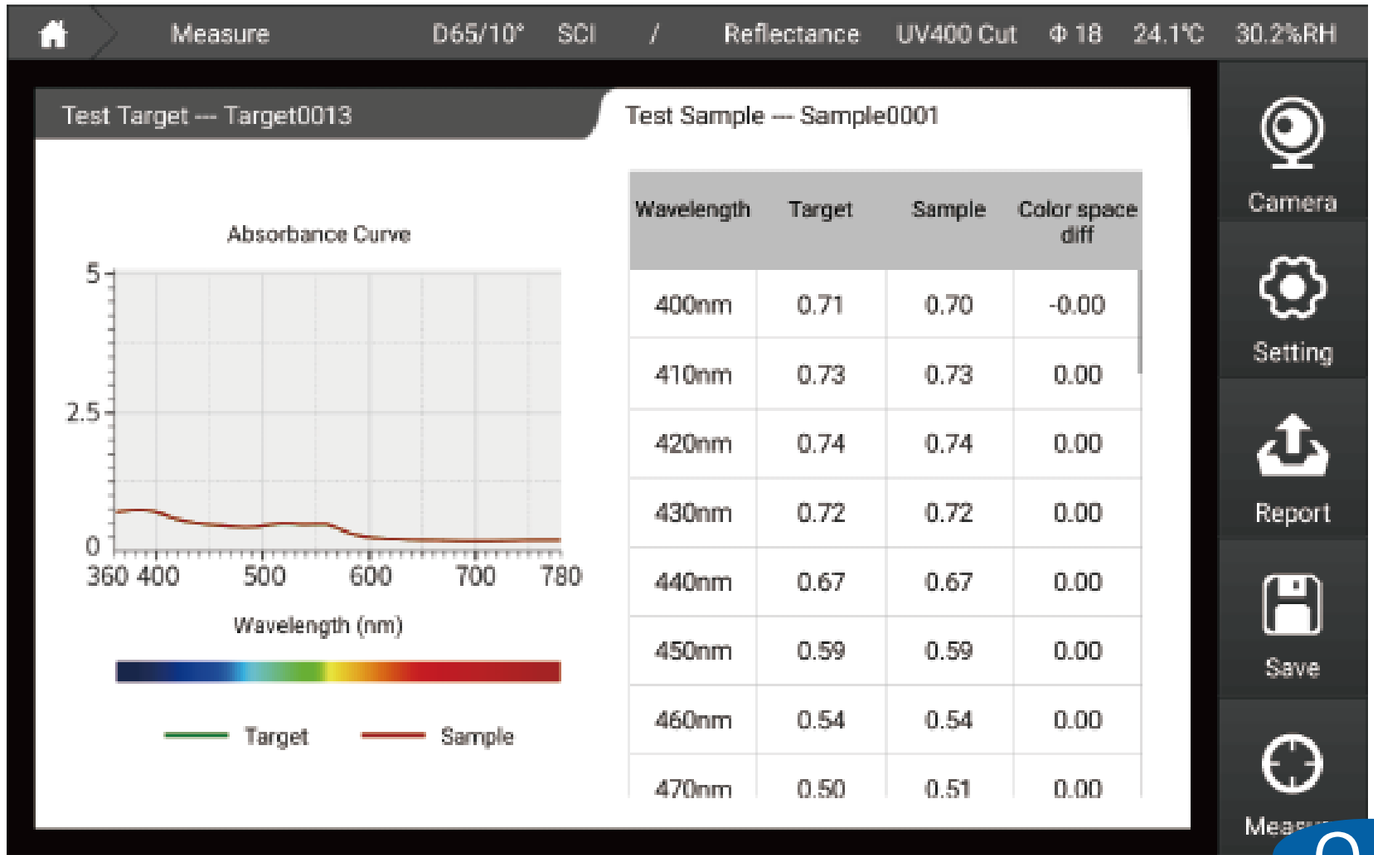

0–7

[Haze]

P-1

After choose haze parameter, the instrument can automatically switch into transmittance mode, C light source and 2 ° viewing angle.

Two steps for measuring haze:

1. Fix white tile into reflectance aperture, put sample on transmittance aperture.
2. Fix black cavity into reflectance aperture, put sample on transmittance aperture.

When enter into haze measure page, instrument will remind calibration, after calibration, we can measure sample. Calibration need only to be done once when the instrument is switched on or enter into haze measure page.

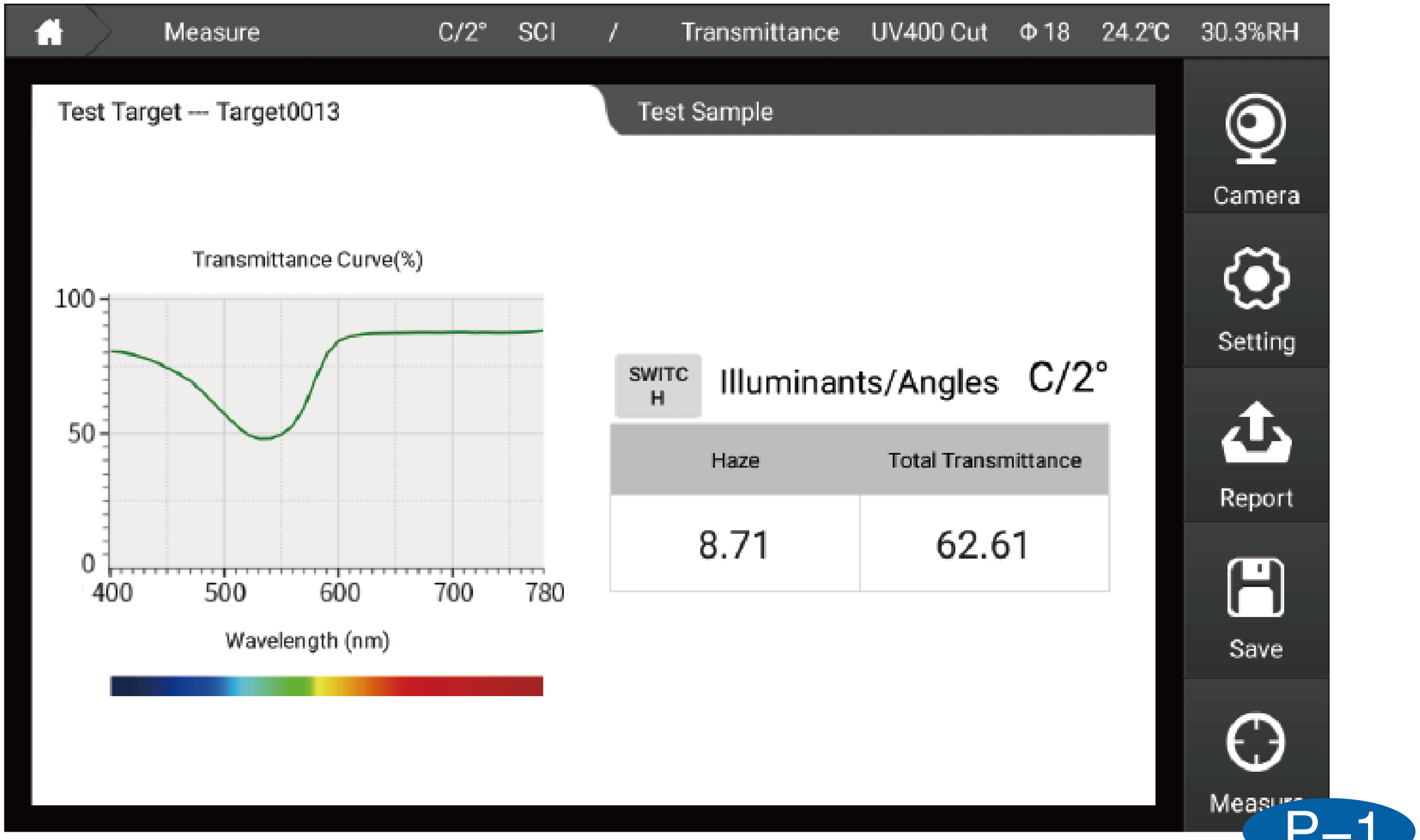
Measure
C/2°
SCI
/
Transmittance
UV400 Cut
Φ18
24.2℃
30.3%RH
Test Target --- Target0013
Test Sample
Transmittance Curve(%)
100
50
0
400
500
600
700
780
Wavelength (nm)
SWITCH
Illuminants/Angles
C/2°
Haze
Total Transmittance
8.71
62.61
Camera
Setting
Report
Save
Measure

P–1

[Opacity]

Q–1

1. Two steps for measuring opacity :
Measure the sample which is painted on white cardboard then measure the sample which is painted on black cardboard.
2.The left is the sample's L*,a*,b* and Y value on black cardboard and the right is the sample's L*,a*,b* and Y on white cardboard.
3.The sample measurement interface can compare the L *, a *, b *, and Y values of in white and black background respectively, then calculate and display dL *, da *, db *, dc *, dE *, dY and dOpacity comparing to the standard.

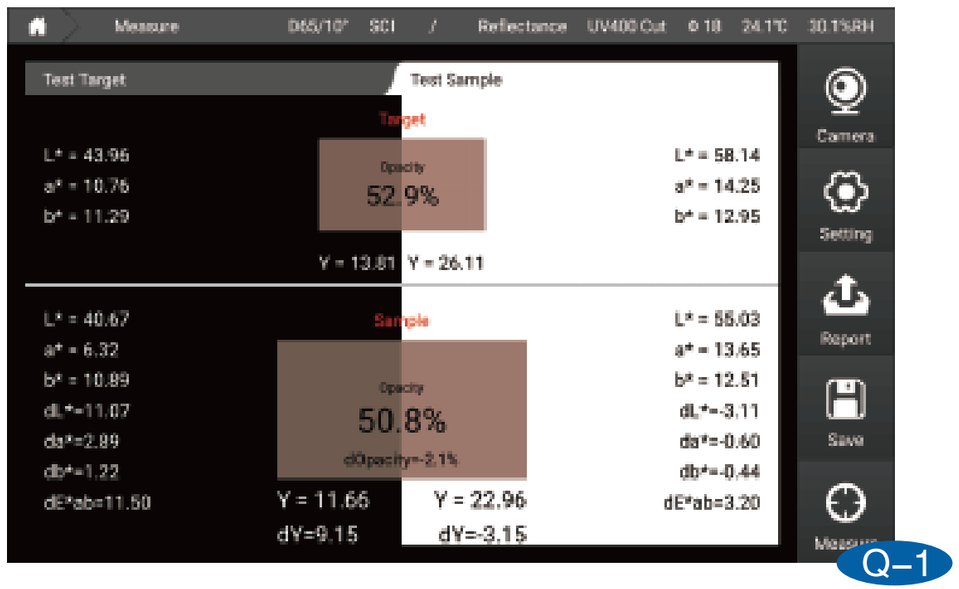

Q–1

[Metamerism]

R–1

The left side is the sample's color value calculated by the first illuminant and angle, and the right side issample's color value calculated by the second illuminant and angle. Metamerism is the value calculated by the same sample under two angles of the two lilluminants.

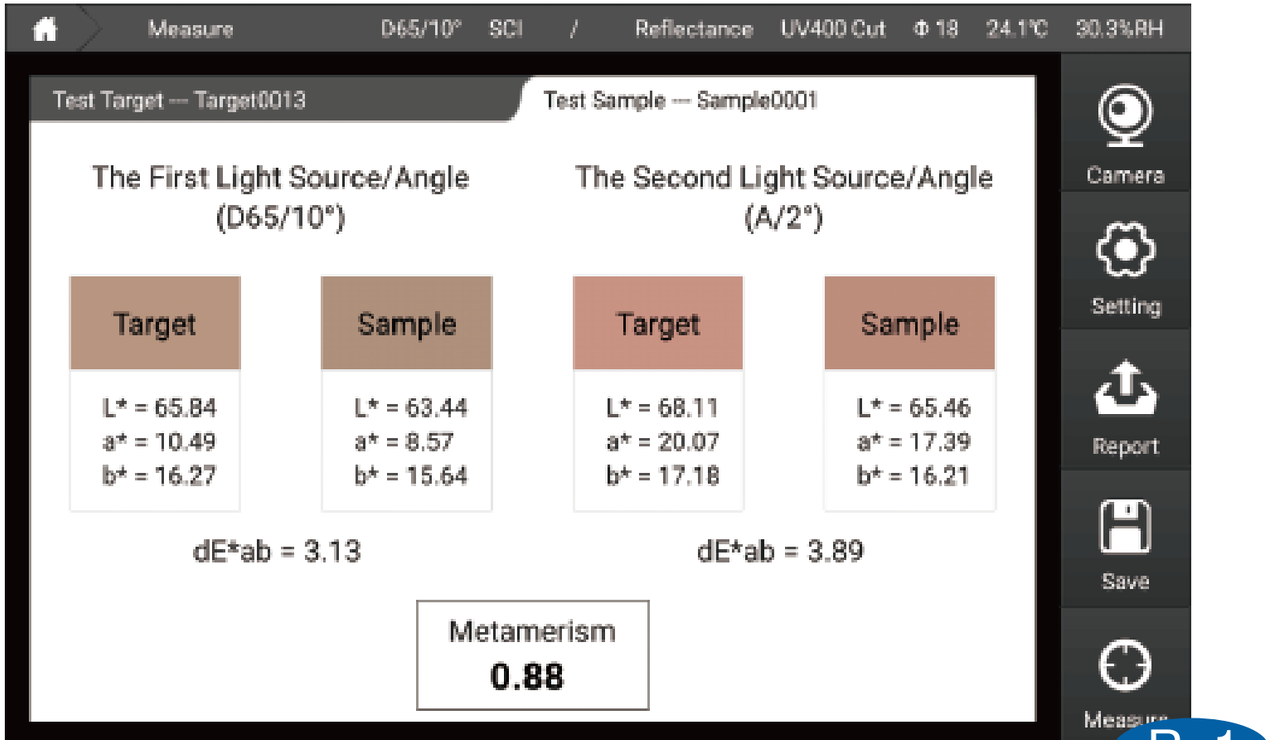

R–1

[Liquid Chromaticity]

S–1

1.When choose liquid chromaticity, the instrument can automatically switch into transmittance mode, C light source and 2 ° viewing angle.
2.The left side is the glass cell light path and standards. (for example if user want to measure Saybolt, glass cell with 50mm light path will be recommended) The right side is the value and pass/fail result.

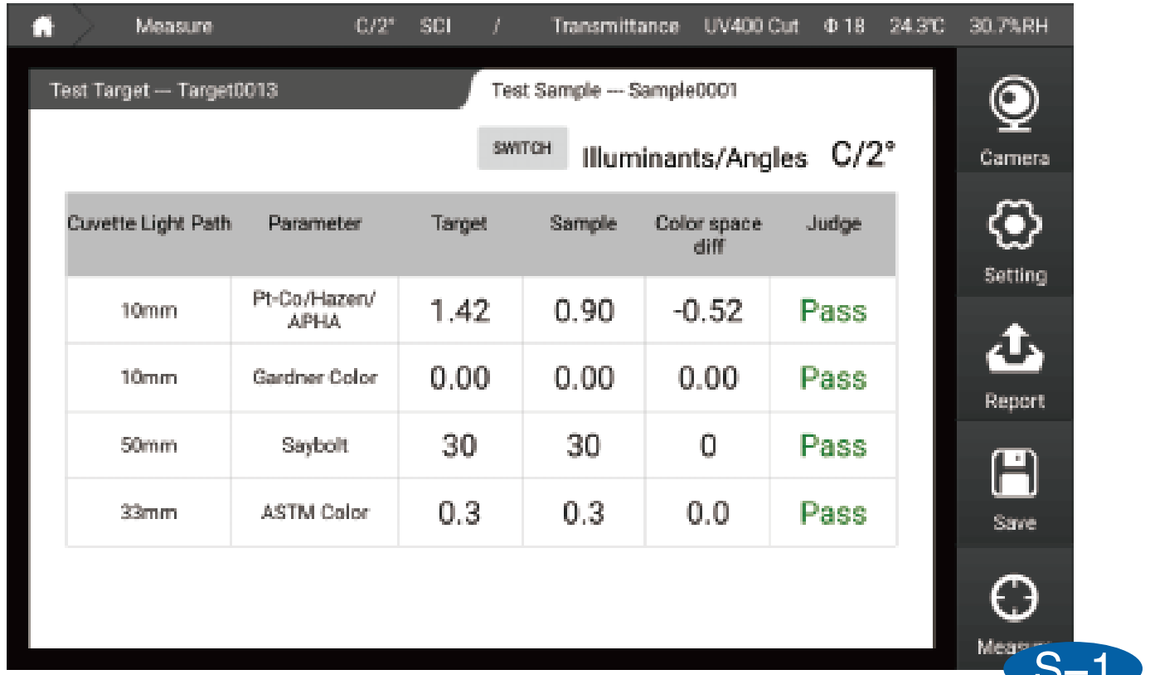

S–1

[Find Similar Color]

T-1

1. Enter into find similar color interface, instrument will remind set the instrument into D65/10/SCI mode, choose yes, instrument mode will be into D65/10/SCI mode.
2. On the left is the sample L*,a*,b* value, under the color value, it is the "my color library" and we can also set how many pieces result to search.
3. On the right side is the similar colors. We can choose from different color library and set how many pieces of result to show. When we change the color library or change the number, the new result will show on right side.

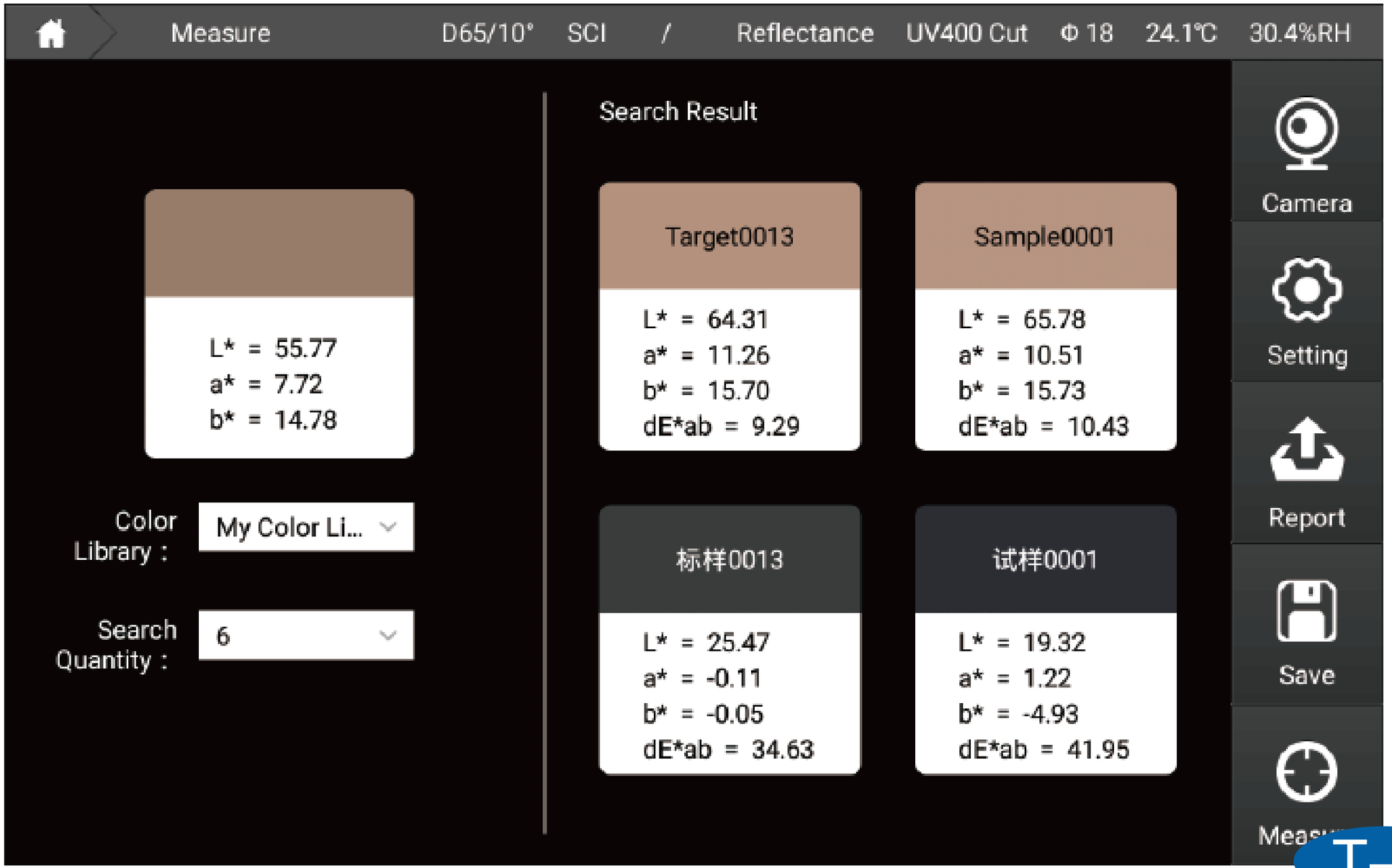
Measure
D65/10°
SCI
/
Reflectance
UV400 Cut
Φ 18
24.1℃
30.4%RH
L* = 55.77
a* = 7.72
b* = 14.78
Color Library :
My Color Li...
Search Quantity :
6
Search Result
Target0013
L* = 64.31
a* = 11.26
b* = 15.70
dE*ab = 9.29
Sample0001
L* = 65.78
a* = 10.51
b* = 15.73
dE*ab = 10.43
标样0013
L* = 25.47
a* = -0.11
b* = -0.05
dE*ab = 34.63
试样0001
L* = 19.32
a* = 1.22
b* = -4.93
dE*ab = 41.95
Camera
Setting
Report
Save
T-1

[Color Master Batches]

U–1

This interface is dedicated to the measurement of color master batches, please follow the prompts to measure. There are parameter settings in the top right, 10 parameters can be added at most.

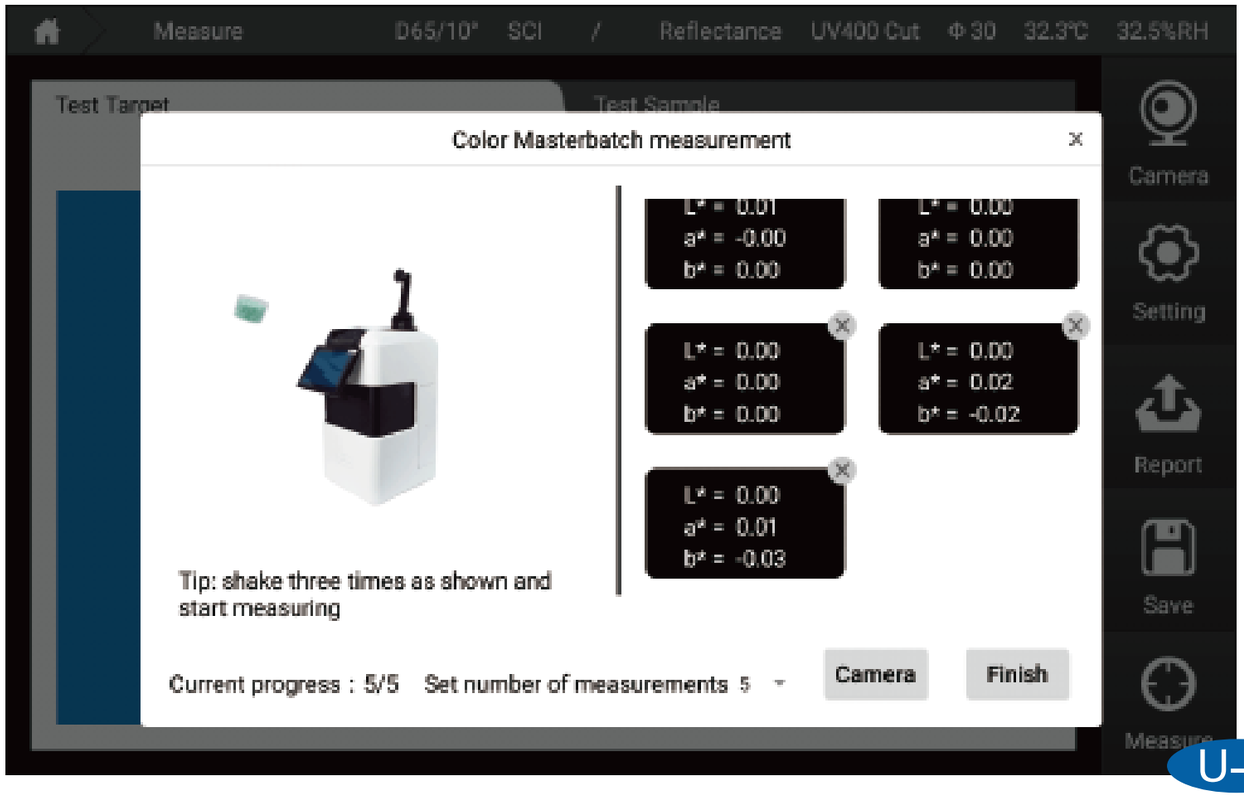

U–1

[Titanium Dioxide]

V–1

This interface is dedicated to the measurement of titanium dioxide, please follow the prompts to measure. There are parameter settings in the top right, 10 parameters can be added at most.

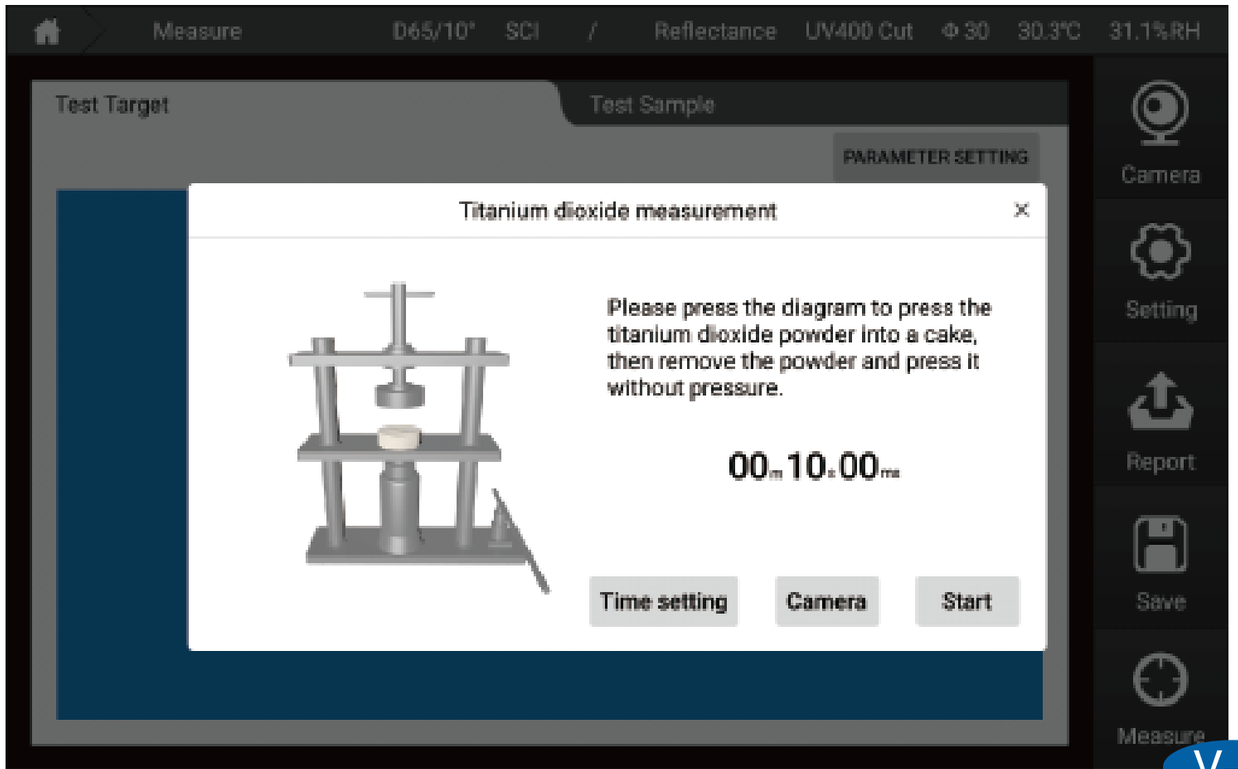

[Paste]

W–1

This interface is dedicated to the measurement of paste, please follow the prompts to measure. There are parameter settings in the top right, 10 parameters can be added at most.

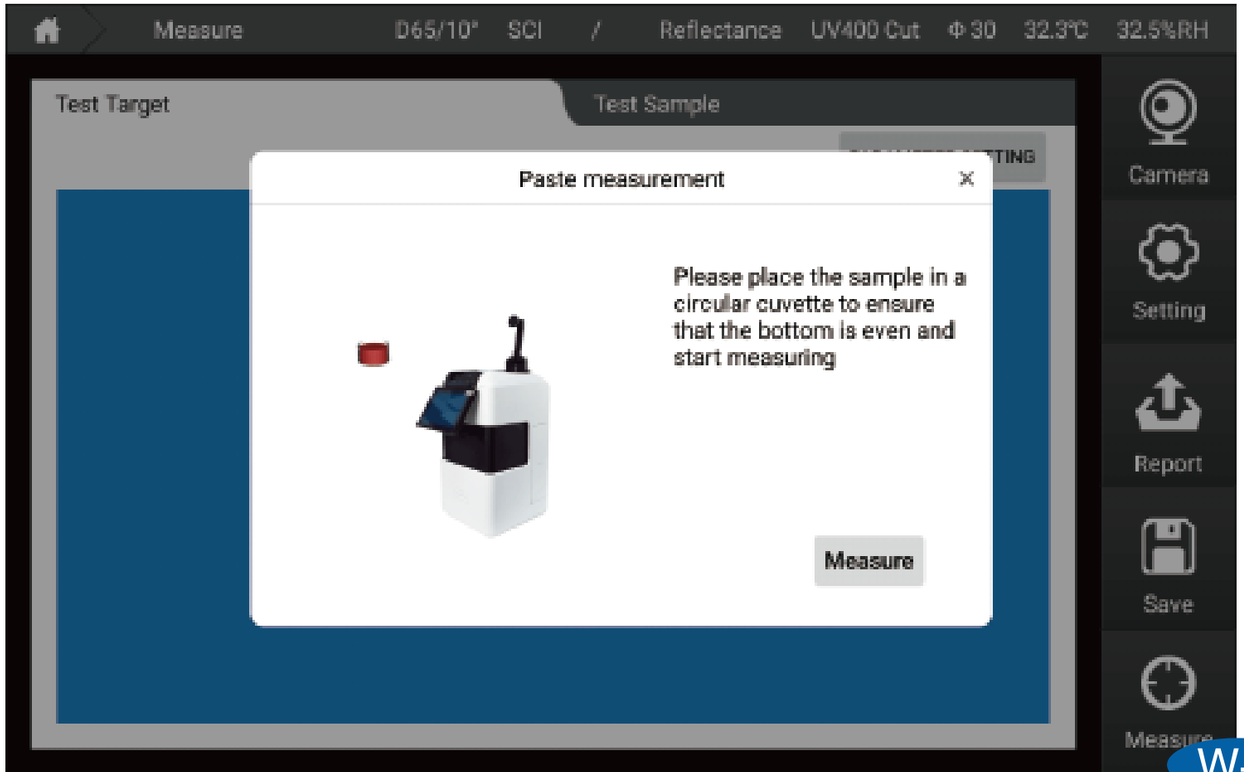

W–1

Trouble Shooting

Error	Analysis	How to Solve
1.Instrument can not switch on	Check if the instrument is connected with the power successfully	Make sure power cord interface is well connected
2. Calibration Failed	1.Check if white tile is on aperture for black calibration. 2.Check if black cavity is on aperture for white calibration. 3.Transmittance calibration operation is wrong.	1. Make sure black cavity is used for black calibration and white tile is used for white calibration. 2.Follow the instrument instruction when do transmittance calibration.
3. Error in measurement results	Check if the tolerance setting is reasonable	Check and change tolerance setting
4. Unreasonable test results	1.Check if there is space between instrument aperture and sample. 2.Check if the sample surface is with scratches. 3.Check if instrument test mode is right.	1. Make sure no space between measurement aperture and sample. 2. Make sure the sample surface is good and flat. 3. Set instrument mode before measure.
5.Wrong Aperture Recognition	1. Measuring aperture is not placed on instrument. 2. Aperture is placed in wrong direction.	1. Check if the reflectance test aperture is placed on instrument or not. 2. Check if the direction of the reflectance test aperture is right or not. Try to turn it over.

Accessories

Standard Accessories

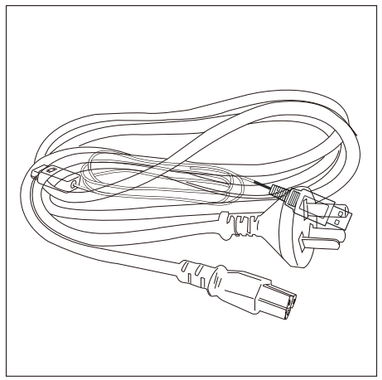

Power Adaptor

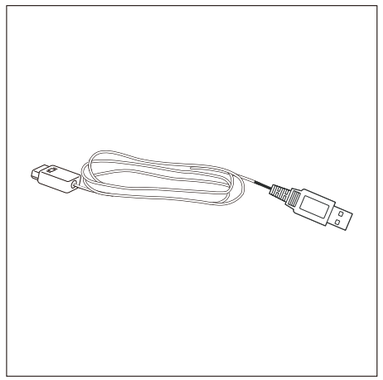

USB Cable

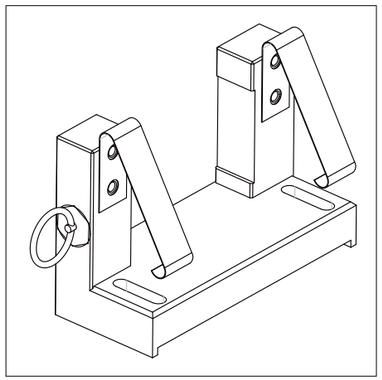

Transmittance Fixture

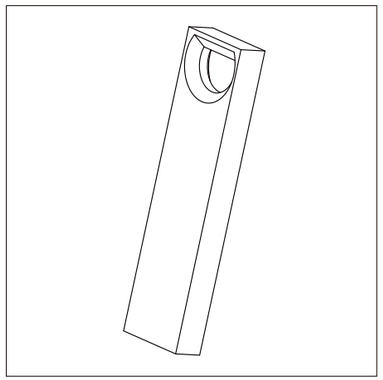

USB Disk

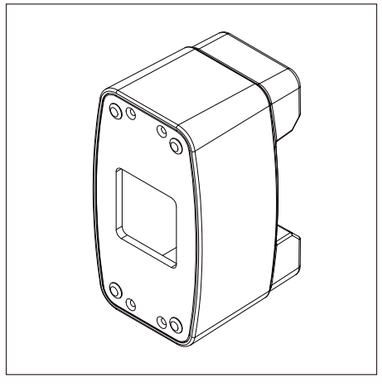

Black Cavity

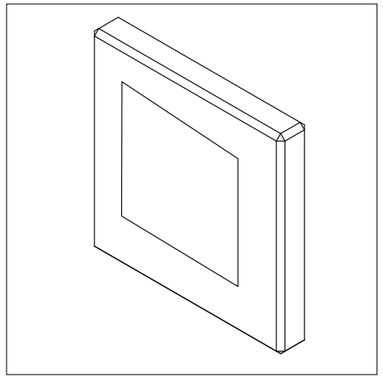

White Tile

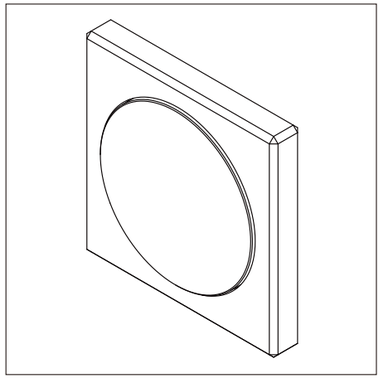

Green Tile

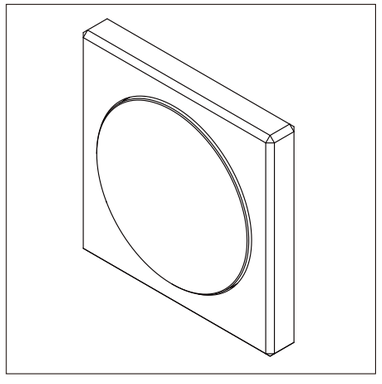

Fluorescent plate

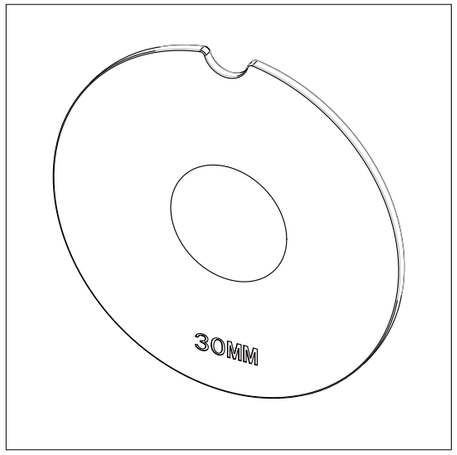

30mm Aperture

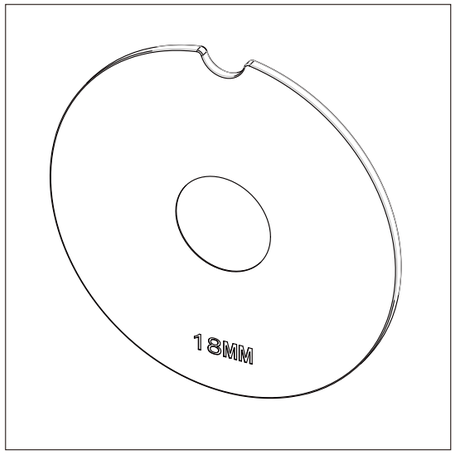

18 mm Aperture

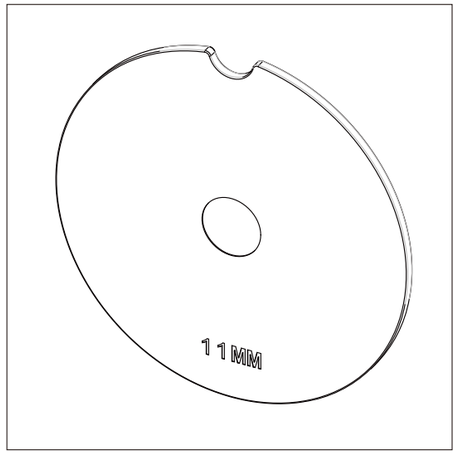

11 mm Aperture

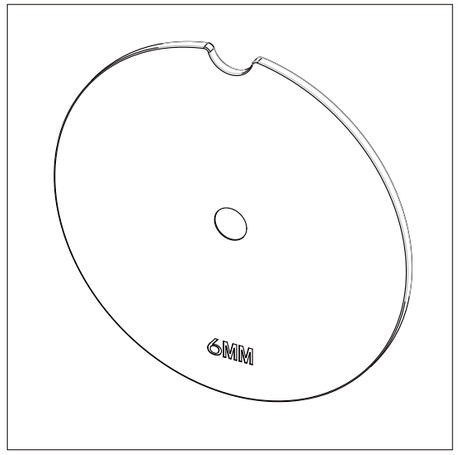

6 mm Aperture

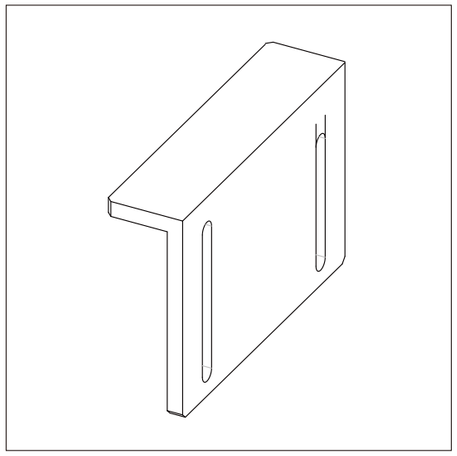

Support

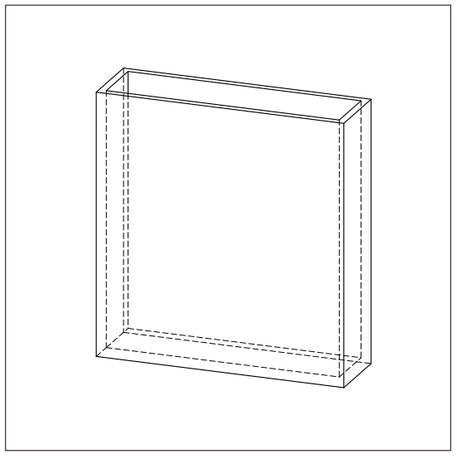

Glass Cell

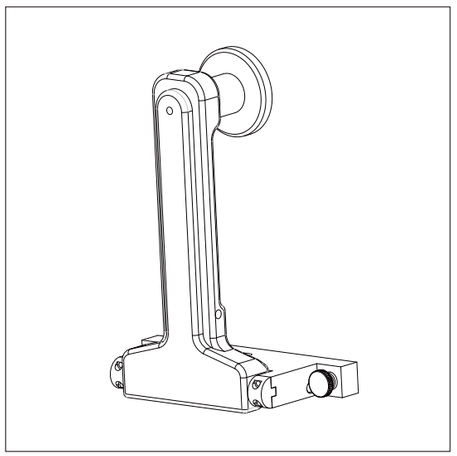

Sample Fixture

Optional Accessories

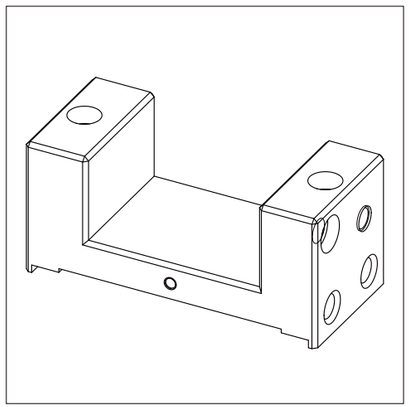

Transmittance Heating Fixture

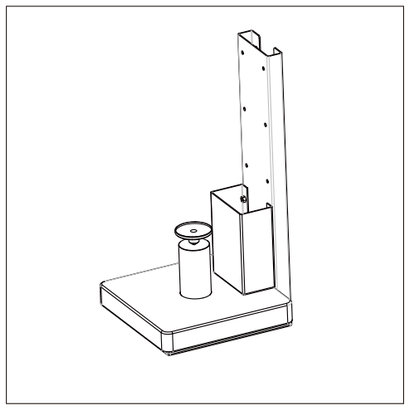

Vertical Support

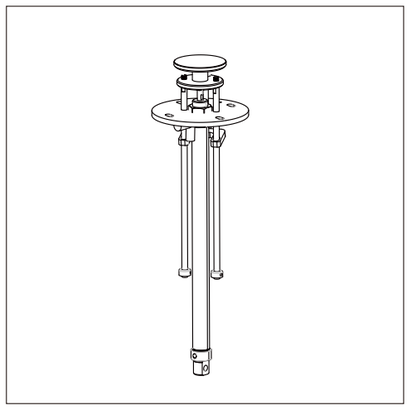

Pneumatic ram
(including control circuit)

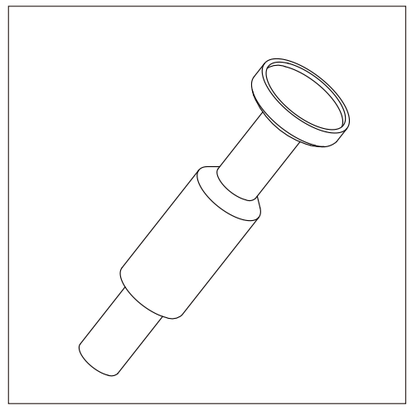

Small Sample Fixture

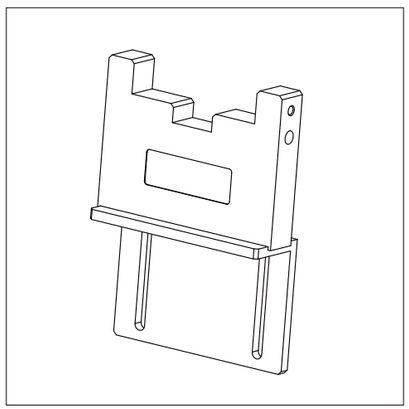

Reflectance Glass Cell Support

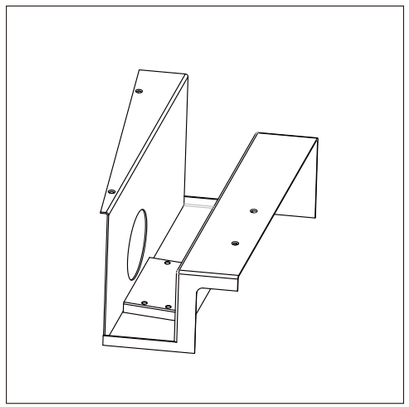

Corrosion Resistant Support
(not removable)

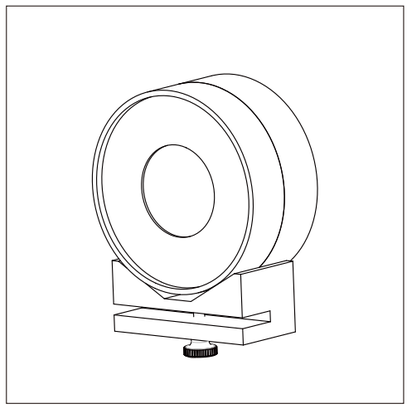

Fiber Holder

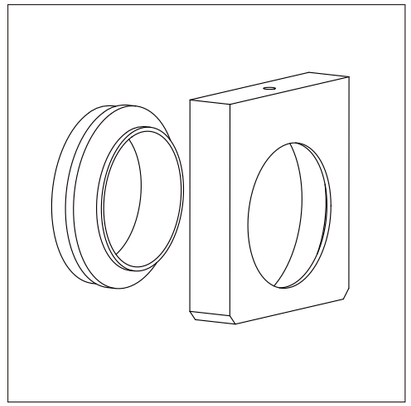

Film Fixture

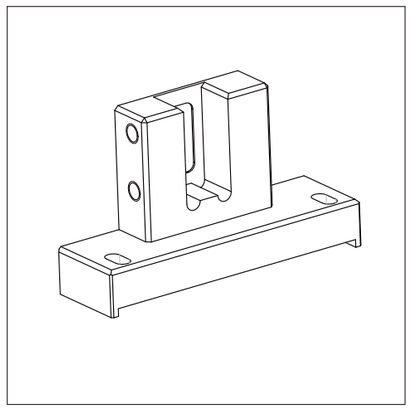

Transmittance Fixture for Small Aperture



Trolley Case

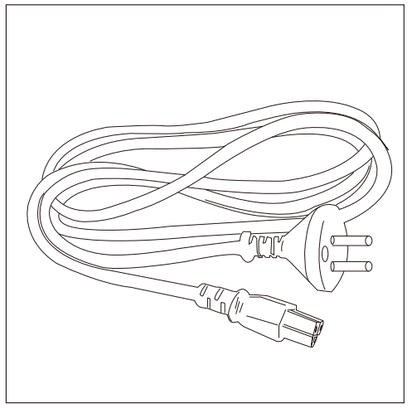

European Standard Plug

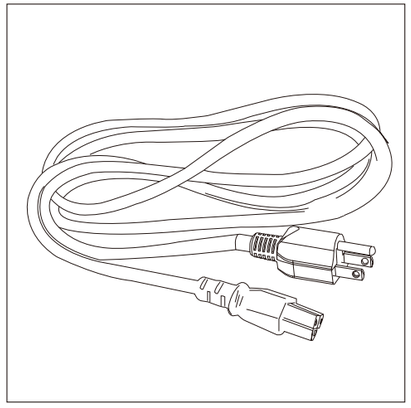

American Standard Plug

Company Statement

1.The company promises to users that from the date of your receipt to the end of the warranty period, the company will be responsible for free repairs for failures caused by non-human factors under normal use, and the company will provide maintenance for failures beyond the warranty period or caused by human factors , maintenance materials and related costs will be charged.

2.Damage occurring under third party usage would not be eligible for warranty service.

3.The company is not responsible for data loss because of error, repairing, software upgrade,or power outages. To prevent loss of important data, please save copies of the data on your PC.

4.The copyright ownership of the instrument and its associated software belong to our company and is protected by the Copyright Laws of People’s Republic of China.

5.Our company sells the instrument does not mean we transfer the copyright, or any intellectual property’s ownership to the user.

6.The specifications and information in this manual are subjected to further updates without notice.